Naval Education and
Training Command

NAVEDTRA 72204
September 1993
0503-LP-477-5700

Nonresident Training
Course (NRTC)

Machinery Repairman 3

Only one answer sheet is included in the NRTC. Reproduce the required number of sheets you need or get answer sheets from your ESO or designated officer.

DISTRIBUTION STATEMENT A: Approved for public release; distribution is unlimited.

Nonfederal government personnel wanting a copy of this document must use the purchasing instructions on the inside cover.

0 5 0 3 L P 4 7 7 5 7 0 0

DISTRIBUTION STATEMENT A: Approved for public release; distribution is unlimited.

Nonfederal government personnel wanting a copy of this document must write to Superintendent of Documents, Government Printing Office, Washington, DC 20402 OR Commanding Officer, Naval Publications and Forms Directorate, Navy Aviation Supply Office, 5801 Tabor Avenue, Philadelphia, PA 19120-5099, Attention: Cash Sales, for price and availability.

NAVAL EDUCATION AND TRAINING PROGRAM
MANAGEMENT SUPPORT ACTIVITY
6490 SAUFLEY FIELD ROAD
PENSACOLA, FL 32509-5237

ERRATA NO. 1 3 MAY 1994
STOCK ORDER NO.
0503-LP-477-5701

SPECIFIC INSTRUCTIONS AND ERRATA FOR NONRESIDENT TRAINING COURSE

MACHINERY REPAIRMAN 3, NAVEDTRA 72204

1. To receive credit for deleted questions, show this errata to your local course administrator (ESO/SCORER). That person is directed to correct the answer key for this course by deleting the questions noted below.

2. No attempt has been made toissue corrections for errors in typing, punctuation, and so on that will not affect your ability to answer the question.

3. ASSIGNMENT BOOKLET: MACHINERY REPAIRMAN 3, NAVEDTRA 72204

a. Delete the following questions and leave the corresponding space on the answer sheet blank.

QUESTIONS	QUESTIONS	QUESTIONS
1-16	2-4	7-13
1-53	6-40	

0503LP4775701

MACHINERY REPAIRMAN 3

NAVEDTRA 72204

Prepared by the Naval Education and Training Program Management
Support Activity, Pensacola, Florida

Congratulations! By enrolling in this course. you have demonstrated a desire to improve yourself and the Navy. Remember. however, this self-study course is only one part of the total Navy training program. Practical experience, schools. selected reading, and your desire to succeed are also necessary to successfully round out a fully meaningful training program. You have taken an important step in self-improvement. Keep up the good work.

HOW TO COMPLETE THIS COURSE SUCCESSFULLY

ERRATA: If an errata comes with this course, make all indicated changes or corrections before you start any assignment. Do not change or correct the Training Manual (TRAMAN) or assignments in any other way.

TEXTBOOK ASSIGNMENTS: The TRAMAN for this course is *MACHINERY REPAIRMAN*, NAVEDTRA 12204-A. The TRAMAN pages that you are to study are listed at the beginning of each assignment. Study these pages carefully before attempting to answer the questions in the course. Pay close attention to tables and illustrations because they contain information that will help you understand the text. Read the learning objectives provided at the beginning of each chapter or topic in the text and/or preceding each set of questions in the course. Learning objectives state what you should be able to do after studying the material. Answering the questions correctly helps you accomplish the objectives.

BLACK DOT INFORMATION: Black dots (●) may be used in the text and correspondence course to emphasize important or supplemental information and to highlight instructions for answering certain questions. Read these black dot entries carefully; they will help you answer the questions and understand the material.

SELECTING YOUR ANSWERS: After studying the TRAMAN, you should be ready to answer the questions in the assignment. Read each question carefully, then select the BEST answer. Be sure to select your answer from the subject matter in the TRAMAN. You may refer freely to the TRAMAN and seek advice and information from others on problems that may arise in the course. However, the answers must be the result of your own work and decisions. You are prohibited from referring to or copying the answers of others and from giving answers to anyone else taking the same course. Failure to follow these rules can result in suspension from the course and disciplinary action.

SUBMITTING COMPLETED ANSWER SHEETS: Complete all assignments as quickly as possible to derive maximum benefit from the course. As a minimum, you must submit at least one assignment per month. This is a requirement established by the Chief of Naval Education and Training. Failure to meet this requirement could result in disenrollment from the course.

TYPES OF ANSWER SHEETS: If you are a U.S. Navy enlisted member on active duty or a drilling U.S. Naval Reserve enlisted member, you should use the answer sheet attached at the end of this course and follow the instructions in section A below. If you are an enlisted U.S. Naval Reserve member who is not attached to a drilling unit or if you are an officer, a civilian, or a member of the U.S. Army, Air Force, Marine Corps, or Coast Guard, you should use the Automatic Data Processing (ADP) answer sheets included in the course package and follow the instructions in section B.

A. Manually Scored Answer Sheets

If you are a U.S. Navy enlisted member on active duty or attached to a U.S. Naval Reserve drilling unit, your course will be administered by your local command. You must use the answer sheet designed for

get a supply of the forms from your Educational Services Officer (ESO). or you may reproduce the one in the back of this course booklet. DO NOT USE THIS FORM FOR COURSES ADMINISTERED BY NETPMSA.

Recording Information on the Manually Scored Answer Sheets: As you complete each assignment, submit the completed answer sheet to your ESO for grading. You may submit more than one answer sheet at a time. Remember, you must submit at least one assignment each month.

Grading: Your ESO will grade each answer sheet and notify you of any incorrect answers. The passing score for each assignment is 3.2. If you receive less than 3.2 on any assignment, the ESO will list the questions you answered incorrectly and give you an answer sheet marked "RESUBMIT." You must redo the assignment and complete the RESUBMIT answer sheet. The maximum score you can receive for a resubmitted assignment is 3.2.

Course Completion: After you have submitted all the answer sheets and have earned at least 3.2 on each assignment, your command should give you credit for this course by making the appropriate entry in your service record.

Student Questions: If you have questions concerning the administration of this course, consult your ESO.

B. ADP Answer Sheets

If you are an enlisted U.S. Naval Reserve member who is not attached to a drilling reserve unit or if you are an officer, a civilian, or a member of the U.S. Army, Air Force, Marine Corps, or Coast Guard, use the ADP answer sheets provided in your course package. You should use one blank original ADP answer sheet for each assignment. Use only the original ADP answer sheet provided in your course package; NETPMSA will not accept reproductions.

Recording Information on the ADP Answer Sheets: Follow the "MARKING INSTRUCTIONS" on each answer sheet. Be sure that blocks 1, 2, and 3 are filled in correctly. This information is necessary for your course to be properly processed and for you to receive credit for your work.

As you work the course, be sure to mark your answers in the course booklet because your answer sheets will not be returned to you. When you have completed an assignment, transfer your answer from the course booklet to the answer sheet.

Mailing the Completed ADP Answer Sheets: Upon completing an assignment, mail the completed answer sheet to:

COMMANDING OFFICER
NETPMSA CODE 074
6490 SAUFLEY FIELD RD
PENSACOLA FL 32559-5000

Use envelopes to mail your answer sheets. You must provide your own envelopes or request them from your ESO. You may enclose more than one answer sheet in a single envelope. Remember, regardless of how many answer sheets you submit at a time, NETPMSA should receive at least one assignment a month.

NOTE: DO NOT USE THE COURSE COMMENTS PAGE AS AN ENVELOPE FOR RETURNING ANSWER SHEETS OR OTHER COURSE MATERIALS.

Grading: NETPMSA will grade the answer sheets and notify you by letter concerning your grade for each assignment, your incorrect answers, and your final grade. The passing score for each assignment is 3.2. If you receive less than 3.2 on any assignment, you must rework the assignment. NETPMSA will enclose a new ADP answer sheet in the letter notifying you of the questions you answered incorrectly. You will be required to redo the assignment and resubmit the new answer sheet. The maximum score you can receive for a resubmitted assignment is 3.2.

Course Completion: When you complete the last assignment, fill out the "Course Completion" form in the back of the course and enclose it with your last answer sheet. NETPMSA will issue you a letter certifying that you satisfactorily completed the course. You should make sure that credit for the course is recorded in your service record. YOU MAY RETAIN THE TEXT.

NOTE: YOUR OFFICIAL COURSE COMPLETION DATE WILL BE THE DATE YOUR LAST ASSIGNMENT IS PROCESSED THROUGH THE NETPMSA ADP SYSTEM--NOT THE DATE YOU DEPOSIT THE LAST

ASSIGNMENT IN THE MAIL. This is especially important if you are taking the course for Naval Reserve retirement credit. You must mail your answer sheets at least 60 days before your anniversary date. This will provide you with enough time for delays in the mail or reworking failed assignments. DO NOT MAIL YOUR ASSIGNMENTS TO THE NAVAL RESERVE PERSONNEL COMMAND (NRPC).

Student Questions: Refer questions concerning this course to NETPMSA by mail (use the address on page ii) or by telephone: DSN 922-1366 or commercial (904) 452-1366.

NAVAL RESERVE RETIREMENT CREDIT

If you are a member of the Naval Reserve, you will receive retirement points if you are authorized to receive them under current directives governing retirement of Naval Reserve personnel. For the purpose of Naval Reserve retirement, this edition of the course is evaluated at 11 points. These points will be credited to you upon your satisfactory completion of the entire course.

NOTE: YOUR OFFICIAL COURSE COMPLETION DATE WILL BE THE DATE YOUR LAST ASSIGNMENT IS PROCESSED THROUGH THE NETPMSA ADP SYSTEM--NOT THE DATE YOU DEPOSIT THE LAST ASSIGNMENT IN THE MAIL. Refer to the Course Completion paragraph under section B. ADP Answer Sheets.

COURSE OBJECTIVES

Upon completing this course, the student should be able to answer questions on the following subjects: Toolrooms. tools, layout, benchwork, metals, plastics, power saws, drilling machines, too1 grinding, carbide tooling, engine lathes, milling machines, shapers. planers, engravers, precision grinding machines, metal buildup, repair work, gear cutting. metal hardness, and heat treatment.

Naval courses may include several types of questions—multiple-choice, true-false, matching, etc. The questions are not grouped by type but by subject matter. They are presented in the same general sequence as the textbook material upon which they are based. This presentation is designed to preserve continuity of thought, permitting step-by-step development of ideas. Not all courses use all of the types of questions available. The student can readily identify the type of each question, and the action required, by inspection of the samples given below.

MULTIPLE-CHOICE QUESTIONS

Each question contains several alternatives, one of which provides the best answer to the question. Select the best alternative, and blacken the appropriate box on the answer sheet.

SAMPLE

s-l. Who was the first person appointed Secretary of Defense under the National Security Act of 1947?

1. George Marshall
2. James Forrestal
3. Chester Nimitz
4. William Halsey

Indicate in this way on the answer sheet:

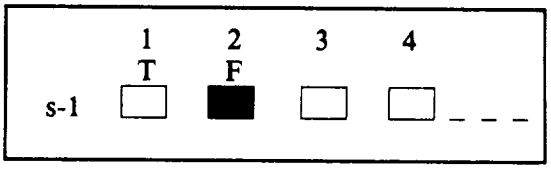

TRUE-FALSE QUESTIONS

Mark each statement true or false as indicated below. If any part of the statement is false the statement is to be considered false. Make the decision, and blacken the appropriate box on the answer sheet.

SAMPLE

s-2. All naval officers are authorized to correspond officially with any systems command of the Department of the Navy without their respective commanding officer's endorsement.

1. True
2. False

Indicate in this way on the answer sheet:

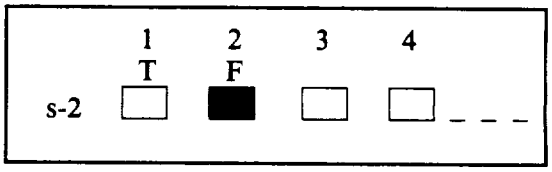

MATCHING QUESTIONS

Each set of questions consists of two columns, each listing words, phrases or sentences. The task is to select the item in column B which is the best match for the item in column A that is being considered. Items in column B may be used once, more than once, or not at all. Specific instructions are given with each set of questions. Select the numbers identifying the answers and blacken the appropriate boxes on the answer sheet.

SAMPLE

In questions s-3 through s-6, match the name of the shipboard officer in column A by selecting from column B the name of the department in which the officer functions. Some responses may be used once, more than once, or not at all.

A. OFFICER	B. DEPARTMENT
s-3. Damage Control Assistant	1. Operations Department
s-4. CIC Officer	2. Engineering Department
s-5. Disbursing Officer	3. Supply Department
s-6. Communications Officer	

Indicate in this way on the answer sheet:

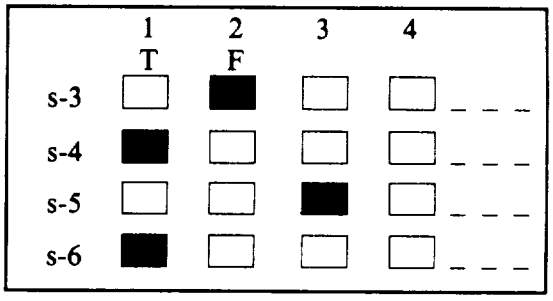

ASSIGNMENT 1

Textbook Assignment: "Toolrooms and Tools," chapter 1, and "Layout and Benchwork." chapter 2.

1-1. A shipboard toolroom should have which of the following provisions NOT required in a toolroom ashore?

1. Cushions to reduce damage to tools
2. Fasteners to hold tools in place
3. Special bins to store power tools
4. Replacement parts to repair broken tools

1-2. The toolroom keeper normally does NOT have which of the following duties?

1. Control the custody of tools
2. Test metal for hardness
3. Store measuring instruments properly
4. Replace broken hammer handles

A. Metal shelves
B. Metal rotating bins
C. Lined wooden boxes
D. Metal cabinets with various sized drawers
E. Pegboard equipped with fastener

Figure 1A

IN ANSWERING QUESTIONS 1-3 THROUGH 1-5, SELECT FROM FIGURE 1A THE BEST STORAGE SPACE FOR THE ITEM DESCRIBED IN THE QUESTION.

1-3. The cutter shown in figure 1-15 in your textbook.

1. A
2. C
3. D
4. E

1-4. Nuts and bolts.

1. A
2. B
3. C
4. D

1-5. A gear tooth vernier.

1. B
2. C
3. D
4. E

1-6. Which of the following is a good practice for a toolroom keeper to follow?

1. Check the accuracy of precision tools before issuing them, and again after they are returned
2. Repair damaged tools immediately after they are returned to the toolroom
3. Remove all oil and foreign matter from tools returned to the toolroom, and store them dry
4. Sharpen all cutting tools before placing them in their storage spaces

1-7. To control tools loaned to all departments in a ship, a toolroom keeper should use what procedure?

1. Provide a checkout log at the issuing window and require borrowers to sign their names and list the tool borrowed
2. Issue numbered tool checks to all departments; when a department borrows a tool, it surrenders a tool check to the toolroom keeper
3. Maintain a checkout board with a separate column for each department
4. Use checkout slips or forms to record the borrower's name, name of the tool, its location, and the date

1-8. When controlled equipage is received from the supply department, what person initially signs the custody card?

1. The user
2. The toolroom keeper
3. The division officer
4. The department head

1-9. Inventory of controlled equipage is conducted at least once each quarter.

1. True
2. False

1-10. A dial indicator is most useful for what purpose?

1. To locate the center of a piece of round stock
2. To check a shaft for out-of-roundness
3. To true the internal surfaces of a cylinder
4. To measure the distances between two closely mated surfaces

1-11. The thread micrometer shown in figure 1-4 of your textbook is used to measure what type of thread?

1. Acme
2. Square
3. 60° V-form
4. Buttress

1-12. Standard vernier calipers have scales graduated in what increments?

1. 0.0001 in.
2. 0.001 in.
3. 0.01 in.
4. 0.1 in.

1-13. To check the inside of a cylinder for out-of-roundness, you should use a/an

1. master ring gauge
2. dial vernier caliper
3. outside micrometer
4. dial bore gauge

1-14. The height at which an adjustable parallel is locked should be determined by what means?

1. A scale on the diagonal edge of one block
2. An outside micrometer measurement
3. A feeler gauge placed between the block and the workpiece
4. A direct comparison with a gauge block

1-15. A gear tooth vernier can be used to measure which or the following dimensions?

1. One linear dimension only
2. One linear dimension and one angle simultaneously
3. Two linear dimensions simultaneously
4. Two linear dimensions and two arcs simultaneously

1-16. A one-quarter-size scale that is 12 inches long is calibrated to read from zero to

1. 36 in.
2. 48 in.
3. 3 in.
4. 4 in.

1-17. The steel rule with holder set is used normally to measure what features?

1. Recesses
2. Gear teeth
3. Thicknesses
4. Cylindrical surfaces

1-18. Acme thread tool gauges are used for what purpose?

1. To measure the pitch of screw or bolt threads
2. To estimate the thread angle of screws or bolts
3. To set up thread-cutting tools
4. To determine clearances between bolt and nut threads

1-19. Which of the following is an ordinary use of parallel blocks?

1. To check the concavity of a curved surface
2. To determine whether the opposite edges of a workpiece are parallel
3. To compare workpiece dimensions with a finished piece
4. To accurately position work for machining

1-20. A mechanism has a bushing with a 6-inch diameter and a clearance of 0.001 inch between it and the mechanism housing. To check the housing clearance, you should use what tool?

1. A feeler gauge
2. A 6-inch metal scale
3. A cutter clearance gauge
4. A micrometer

1-21. A sine bar is used to locate very small irregularities on a machined surface.

1. True
2. False

1-22. A rounded shoulder on a machined part is measured with what gauge?

1. Center
2. Feeler
3. Surface
4. Radius

1-23. The most precise check of the accuracy of a micrometer is done with what tool?

1. A gauge block
2. A machinist's rule
3. A dial indicator
4. A vernier caliper

1-24. The spindle of a zero adjusted micrometer is in contact with the anvil. What problem can cause it to read more than zero?

1. Thread wear
2. Burrs on the spindle
3. A worn anvil
4. A rusted barrel

1-25. How should you determine if a micrometer needs to be recalibrated?

1. Ask your supervisor
2. Ask the supply clerk
3. Check the QA manual
4. Check the tool calibration sticker

1-26. When using a micrometer, you should avoid all EXCEPT which of the following practices?

1. Back the spindle away from the anvil
2. Measure moving parts
3. Open it by spinning the frame
4. Carry it in your pocket

1-27. You should use what lubricant on the internal parts of a micrometer?

1. Petroleum jelly
2. Silicone grease
3. Graphite powder
4. Light oil

1-28. To zero set an inside micrometer, you should use what instrument?

1. A hollow cylinder standard
2. A micrometer caliper
3. A vernier caliper
4. A cylinder gauge

1-29. Tolerance is the difference between the allowable minimum and maximum dimensions.

1. True
2. False

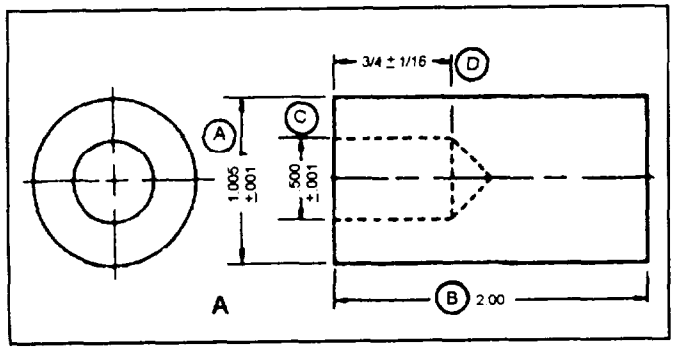

Figure 1B

IN ANSWERING QUESTIONS 1-30 THROUGH 1-32, REFER TO FIGURE 1B.

1-30. What is the total tolerance of dimension A?

1. 0.0005 in.
2. 0.001 in.
3. 0.002 in.
4. 0.006 in.

1-31. What is the maximum permissible length of dimension B?

1. 2.0 in.
2. 2.05 in.
3. 2.005 in.
4. 2.0005 in.

1-32. What is the short limit of dimension D?

1. 5/8 in.
2. 11/16 in.
3. 3/4 in.
4. 13/16 in.

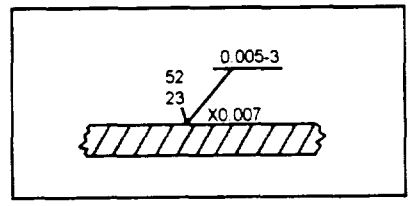

Figure 1C

IN ANSWERING QUESTIONS 1-33 AND 1-34, REFER TO FIGURE 1C.

1-33. What is the maximum permissible roughness height rating?

1. X.007
2. 52
3. 3
4. 0.005-3

1-34. What type of lay is required by this drawing?

1. Angular in both directions to the surface boundary line
2. Parallel to the surface boundary line
3. Multidirectional with respect to the surface boundary line
4. Perpendicular to the surface boundary line

1-35. What is the definition or a layout?

1. The positioning of parts on the workbench
2. The marking or metal surfaces as an outline for machining
3. A guide that aids in the disassembly of equipment to be repaired
4. An original drawing used to make a blueprint

1-36. When scribing a line on a metal surface, how should you position the handle of the scratch awl with reference to a straightedge and the direction of movement?

1. Point it opposite to the direction of movement and over the straightedge
2. Point it in the direction of movement and over the straightedge
3. Point it opposite to the direction of movement and away from the straightedge
4. Point it in the direction of movement and away from the straightedge

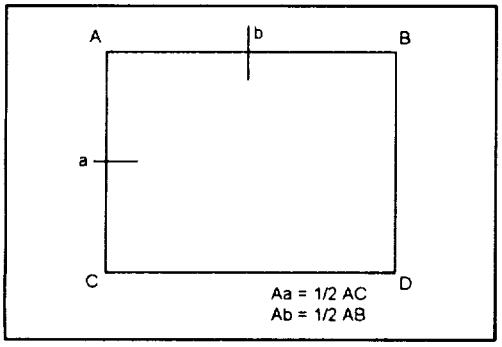

Figure 1D

IN ANSWERING QUESTION 1-37, REFER TO FIGURE 1D.

1-37. What is the best way to find the center of the rectangle ABCD?

1. Scribe a line parallel to AC through point b and find the midpoint of this line
2. Scribe lines from points a and b square with the edge until they intersect
3. Scribe a line from A to D and another from B to C
4. Scribe two arcs with radius Aa

1-38. To locate the center of round stock, you should use what instrument?

1. A divider
2. A center head and rule
3. Trammel points
4. A square

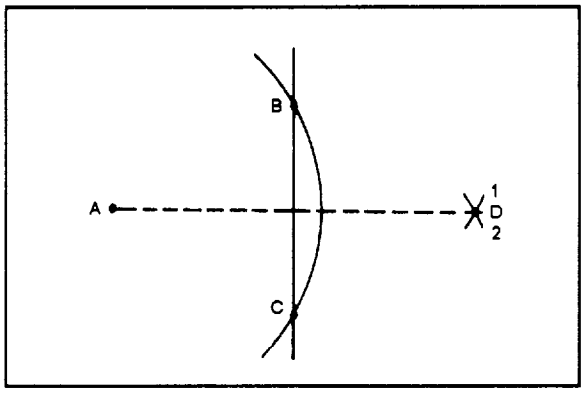

Figure 1E

IN ANSWERING QUESTIONS 1-39 AND 1-40. REFER TO FIGURE 1E.

1-39. In drawing a line perpendicular to line BC through point A, you first prick punch point A. What should be your next step?

1. Draw arc BC
2. Prick punch points B and C
3. Draw arcs 1 and 2
4. Prick punch point D

1-40. Arc 2 is drawn with dividers centered on what point?

1. A
2. B
3. C
4. D

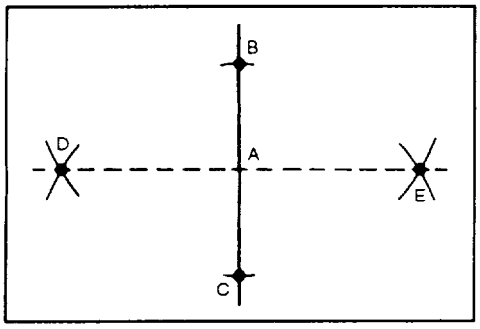

Figure 1F

IN ANSWERING QUESTIONS 1-41 AND 1-42, REFER TO FIGURE 1F. YOU ARE DRAWING A LINE PERPENDICULAR TO LINE BC THROUGH POINT A.

1-41. What should be your first step?

1. Prick punch point A
2. Draw arcs B and C
3. Draw arcs at D and E
4. Prick punch points D and E

1-42. What should be your second step?

1. Prick punch point A
2. Draw arcs B and C
3. Draw arcs at D and E
4. Prick punch points D and E

1-43. You are using dividers to establish the points you need to scribe parallel lines 2 inches apart? You should set the dividers to what length?

1. .5 in.
2. 2.0 in.
3. 6.0 in.
4. Any convenient length

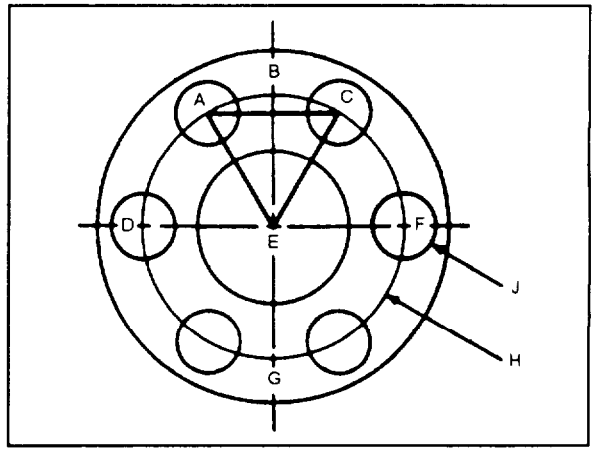

Figure 1G

IN ANSWERING QUESTIONS 1-44 THROUGH 1-47, REFER TO FIGURE 1G.

1-44. The horizontal bisector is indicated by what line?

1. AC
2. AD
3. BE
4. DF

1-45. The pitch chord is indicated by what line?

1. AC
2. AE
3. BG
4. CF

1-46. What line bisects a pitch chord?

1. CE
2. DE
3. FE
4. GB

1-47. You are laying out a valve flange for drilling. You should locate what part of the construction first?

1. Line BG
2. Line DF
3. Point A
4. Point E

1-48. The pitch chords of a 6-hole pipe flange are equal to the

1. radius of the pitch circle
2. diameter of the pitch circle
3. radius of the flange
4. inside diameter of the pipe

1-49. A flange has 5 bolt holes and a pitch diameter of 4 inches. What is its approximate pitch chord?

1. 0.59 in.
2. 1.18 in.
3. 2.00 in.
4. 2.35 in.

1-50. In metal working, scraping is used primarily for what purpose?

1. To remove sharp edges from castings
2. To produce curved surfaces
3. To smooth a machined surface
4. To prepare castings for machining

1-51. You are scraping a flat surface to achieve a correct clearance. Why do you need to use prussian blue in this work?

1. It sticks to the high spots on the workpiece and shows up the areas that should be scraped
2. It helps prevent "frictional drag" in the scraping operation
3. It helps to maintain longitudinal as well as radial clearance on the flat surface
4. It keeps chips from breaking off the edges when the part is operating again

1-52. To prevent seizing between mated parts that are being force-fitted by a hydraulic ram, you should take what action?

1. Increase ram pressure
2. Lubricate the parts
3. Heat the parts
4. Insert a soft metal plate between the work faces

1-53. To prevent mutilation of the surface of a workpiece that is being pressed, you should take what action?

1. Increase the ram pressure
2. Lubricate the ram
3. Heat the workpiece
4. Insert a soft metal plate between the work and the ram

1-54. What method of filing produces a finer finish?

1. Down
2. Cross
3. Draw
4. Hatch

1-55. To install a screw thread, normally you should NOT use which of the following tools?

1. Inserting tool
2. Tap
3. Tang break-off tool
4. Screwdriver

1-56. The oxygen hose used with oxyacetylene equipment is what color?

1. Red
2. Green
3. Blue
4. Yellow

1-57. On oxyacetylene equipment, the oxygen hose threads in (a) what direction and the acetylene hose threads in (b) what direction?

1. (a) Left-hand, (b) right-hand
2. (a) Left-hand, (b) left-hand
3. (a) Right-hand, (b) right-hand
4. (a) Right-hand, (b) left-hand

1-58. What is the maximum working pressure of acetylene?

1. 5 psig
2. 10 psig
3. 15 psig
4. 20 psig

1-59. An acetylene cylinder valve should be opened what maximum number of turns?

1. 1/4 turn
2. 1/2 turn
3. 1 turn
4. 1 1/2 turns

1-60. You are heating a part with an acetylene torch and a flash back occurs. You should immediately shut off the torch oxygen valve and then shut off the acetylene valve.

1. True
2. False

ASSIGNMENT 2

Textbook Assignment: "Metals and Plastics," chapter 3, and "Power Saws and Drilling Machines," chapter 4.

IN ITEMS 2-1 THROUGH 2-3, SELECT FROM COLUMN B THE BEHAVIOR OF THE METAL THAT IS MADE POSSIBLE BY THE PROPERTY IN COLUMN A.

A. PROPERTY	B. BEHAVIOR
2-1. Ductility	1. Resists deformation when a load is applied
2-2. Tensile strength	2. Can be rolled or hammered into sheets
2-3. Toughness	3. Can be drawn out or pulled into wire form
	4. Resists shock and stress

2-4. High fatigue resistance is desirable in a material that is subjected to

1. abrasion
2. repetition of stress
3. corrosive substances
4. high temperatures

2-5. The ease with which a metal may be planed and shaped is best described by what term?

1. Malleability
2. Plasticity
3. Ductility
4. Machinability

2-6. The heat resistance of a metal is indicated by it's ability to

1. conduct heat
2. withstand stress at high temperatures
3. maintain a temperature that differs from the surrounding temperature
4. maintain constant dimensions under wide variations in temperature

2-7. To make cast iron, you should melt together which of the following materials?

1. Steel and iron ore
2. Iron ore and pig iron
3. Pig iron and scrap iron
4. Scrap iron and steel

2-8. Strength and high resistance to saltwater corrosion make which of the following metals best for use on board ships?

1. Aluminum
2. Copper
3. Bronze
4. Copper-nickel

2-9. K-Monel is made harder and stronger than other grades of Monel by the addition of what element?

1. Aluminum
2. Vanadium
3. Chromium
4. Molybdenum

2-10. Valves for high-temperature, high-pressure piping systems are made from which of the following metals?

1. Tungsten steel
2. Bronze
3. Copper
4. Carbon-molybdenum steel

2-11. Stainless steels contain which of the following metals:

1. Molybdenum
2. Chromium
3. Tungsten
4. Vanadium

2-12. High carbon steel is commonly used for which of the following applications?

1. Ship framing
2. Ship plating
3. Cutting tools
4. Electric wiring

2-13. Electrical wiring on board ship is normally made from which of the following materials?

1. Brass
2. Tin
3. Copper
4. Zinc

2-14. Which of the following metals has the greatest weight per unit volume?

1. Bronze
2. Cast iron
3. Lead
4. Copper-nickel alloy

2-15. A 4- or 5-digit SAP, number is used to identify what type of steel(s)?

1. Plain
2. Alloy
3. Plain and alloy

2-16. A free cutting steel with the classification SAE 1115 has approximately what percentage of alloying elements?

1. 1% manganese and 0.15% carbon
2. 1% phosphorus, 1% sulfur, and 5% carbon
3. ll% chromium and 5% nickel
4. 11% phosphorus and 15% chromium

2-17. The SAE designator 1050 identifies what steel?

1. Carbon-molybdenum
2. Nickel
3. Carbon
4. Copper-nickel

Questions 2-18 and 2-19 refer to the aluminum alloy bearing the Aluminum Association designation 5052-H16.

2-18. The number 5052 identifies what major alloy?

1. Magnesium
2. Silicon
3. Manganese
4. Copper

2-19. The number H16 identifies what characteristics of the aluminum's temper?

1. Strain hardened, then partially annealed and 1/4 hard
2. Strain hardened only and 3/4 hard
3. Strain hardened, then stabilized and 1/2 hard
4. Artificially aged only and 3/4 hard

2-20. What marking designation in the Aluminum Association Marking System identifies an aluminum that is more than 99% pure with no special control over individual impurities?

1. 1075
2. 1999
3. 2030
4. 3056

2-21. Thin copper wire is identified by what marking method?

1. Continuous identification marking
2. Spot symbols
3. Peripheral symbols
4. Tagging

2-22. What information is shown on metals marked with the continuous identification marking system?

1. The producer's name or registered trademark and commercial designation of the steel
2. The name and trademark of the producer who finished the steel before it was marketed
3. The military standards designation and federal government job order number
4. The U.S. Bureau of Standards quality control number and SAE designation

2-23. In a spark test, you should use medium pressure against the grinding wheel because hard pressure will cause what effect in the spark stream?

1. It will increase the temperature of the spark stream and the burst
2. It will cause the spark stream to be diminished or eliminated
3. It will cause the color of the spark stream to change
4. It will decrease the number of forks

2-24. Which of the following steels give off tiny blocks of brilliant white light?

1. Nickel alloy
2. High carbon
3. Molybdenum
4. Silicon alloy

2-25. Which of the following metals CANNOT be identified by a spark test?

1. Cast iron
2. Stainless steel
3. Lead
4. Wrought iron

2-26. When nitric acid placed on a metal produces a slow reaction and a pale green color, the metal probably contains what element?

1. Iron
2. Copper
3. Aluminum
4. Nickel

2-27. No reaction to a acid test indicates what type of steel?

1. Molybdenum
2. Monel
3. Stainless
4. Nickel

2-28. Thermoplastics become hard and brittle when heated.

1. True
2. False

2-29. When you saw plastics, why should you NOT feed the work into the saw too fast?

1. You may bum the work because plastics do not take away the heat produced by sawing
2. You may make an error because plastic can be sawed easily and quickly
3. The saw may become gummy with plastic chips
4. The saw may be broken because some plastics are tough

2-30. Most plastics contain which of the following basic elements?

1. Sodium chloride
2. Carbon
3. Aluminum
4. Silicon

2-31. Which of the following practices is likely to cause a power hacksaw blade to break?

1. Applying coolant directly to the blade rather than to the work
2. Failing to align the cutting mark on the work with the blade
3. Starting the machine with the blade touching the work
4. Using a coarse blade to cut cast iron

2-32. On a power hacksaw, you should cut annealed high-carbon steel with what type of blade?

1. Coarse
2. Regular
3. Medium
4. Fine

2-33. You are using a power hacksaw and cutting through a hard spot in the work. The feed is automatically controlled by what type of feed mechanism?

1. Hydraulic only
2. Gravity only
3. Hydraulic or gravity
4. Mechanical

2-34. When a power hacksaw is used to cut thin steel sheet, what minimum number of teeth must be kept in contact with the work?

1. 8
2. 2
3. 10
4. 4

2-35. Which of the following materials is cut on a power hacksaw without the use of a coolant?

1. Mild steel
2. Carbon steel
3. Cast iron
4. Brass

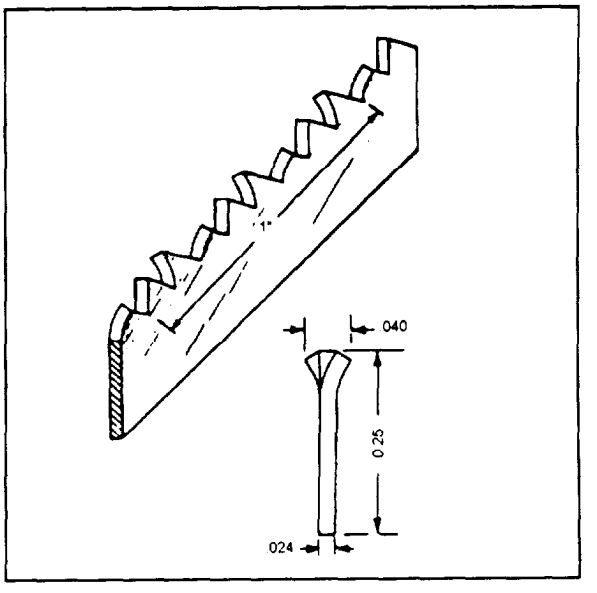

Figure 2A

IN ANSWERING QUESTIONS 2-36 THROUGH 2-39 REFER TO FIGURE 2A.

2-36. What is the pitch of the saw segment?

1. 7
2. 8
3. 9
4. 10

2-37. What is the width of the saw segment?

1. 0.024 in.
2. 0.040 in.
3. 0.250 in.
4. 1.000 in.

2-38. What is the gauge of the saw segment?

1. 0.008 in.
2. 0.016 in.
3. 0.024 in.
4. 0.040 in.

2-39. What is the set of the teeth of the saw segment?

1. 0.008 in.
2. 0.020 in.
3. 0.032 in.
4. 0.040 in.

2-40. What will the continuous feed cutoff saw do automatically as it completes each cut?

1. Raise the saw head only
2. Stop the drive motor only
3. Stop the drive motor and start the coolant motor only
4. Stop the drive motor, start the coolant motor, and raise the saw head

2-41. What saw band set pattern is used to cut metal pipes?

1. Raker
2. Straight
3. Wave
4. Curve

2-42. The upper movable band guide of a bandsaw should clear the workpiece by what maximum distance?

1. 1 in.
2. 2 in.
3. 3/8 in.
4. 1/2 in.

2-43. The abrasive material on a polishing band is carried on what type of backing?

1. Treated paper
2. Fabric
3. Steel
4. Rubber

2-44. When you are cutting on a bandsaw, inadequate feed pressure causes what problem?

1. It breaks the teeth of the saw band
2. It dulls the saw band
3. It snags the saw band
4. It binds the saw band in the work

2-45. Manual work feed on a bandsaw is generally used only on materials up to what thickness?

1. 1 in.
2. 1 1/2 in.
3. 1/2 in.
4. 1/4 in.

2-46. The gauge of the saw band that can be used with a particular band tool machine is limited by what factor?

1. The type of feed
2. The size of the band wheels
3. The type of band guide
4. The range of band speeds available

2-47. The quality of work produced with a metal-cutting bandsaw is limited by which of the following factors?

1. The band speed
2. The feed pressure
3. The band type
4. All of the above

2-48. When you place a saw blade in the jaws of a butt welder, the teeth should face in what direction?

1. Away from the welder
2. Toward the welder
3. Away from the jaws
4. Toward the jaws

2-49. The use of a butt welder is required for what type of cut?

1. Inside
2. Straight
3. Angular
4. Disk

2-50. To determine the correct length of a replacement band on a two-wheel bandsaw, you should take what measurements?

1. Twice the circumference of one wheel plus the distance between wheel centers
2. Twice the distance between wheel centers plus the circumference of one wheel
3. Twice the sum of the distance between wheel centers plus the circumference of two wheels
4. Three times the distance between wheel centers plus the circumference of one wheel

2-51. What step follows the welding and grinding of a spliced saw band?

1. Annealing
2. Polishing
3. Quenching
4. Installing

2-52. Improper tracking of a newly installed saw band is corrected by making what adjustment?

1. Band tension
2. Band guides
3. Backup bearings
4. Whee1 tilt control

2-53. After replacing the blade on a bandsaw, you should start sawing using what amount of tension, if any?

1. Heavy
2. Moderate
3. Light
4. None

2-54. Drilling holes adjacent to square corners in a layout wi11 allow you to use what type of bandsaw blade?

1. Wider
2. Narrower
3. Thinner
4. Smaller

2-55. The worktable only moves vertically on what type of drill press?

1. General purpose
2. Heavy duty
3. Sensitive
4. Radial

2-56. A general purpose drill press has what type of taper socket to hold drill bits?

1. Jarno
2. Pipe
3. Morse
4. Brown & Sharpe

2-57. To drill a hole on a heavy-duty drill press, you position the workpiece; but on a radial drill press, you position the drilling head.

1. True
2. False

2-58. A sensitive drill press is particularly useful for what type of work?

1. Work requiring many holes to be drilled in a large piece of metal
2. Large castings requiring holddown clamps during drilling
3. Work requiring the operator to rely on a sense or touch to determine how the drill is cutting
4. Work requiring high-speed drilling in which vibrations are not harmful

2-59. What part of a twist drill enables you to remove it from the socket?

1. Dead center
2. Web
3. Shank
4. Tang

2-60. What separates the flutes of a twist drill?

1. The point
2. The web
3. The shank
4. the body

2-61. You are using a twist drill with a cutting speed of 88 fpm to drill a l/2-inch hole. What is the approximate speed of the drill?

1. 90 rpm
2. 200 rpm
3. 670 rpm
4. 750 rpm

2-62. When you cut both alloy steel and cast iron without changing high-speed drill bits or speed, what drill speed is preferred?

1. 50 fpm
2. 70 fpm
3. 100 fpm
4. 150 fpm

2-63. The feed of a drill press is expressed in what values?

1. Centimeters per revolution
2. Inches per minute
3. Thousandths of an inch per minute
4. Thousandths of an inch per revolution

2-64. Most of the twist drills you will use are made from what material?

1. Carbon steel
2. High-carbon steel
3. High-speed steel
4. Cobalt

2-65. What is the approximate cutting speed of a 1-inch twist drill running at 100 rpm?

1. 23 fpm
2. 26 fpm
3. 30 fpm
4. 36 fpm

2-66. You are getting ready to drill and you want to line up the center-punch mark on the workpiece exactly under the spindle. You will find it useful to follow what procedure?

1. Use a drill larger than the required size to make the lead hole
2. Insert a dead center in the spindle socket
3. Chisel a groove away from the punch mark
4. Use a counterbore pilot to guide your drill to the punch mark

2-67. You can expect a 2-inch drilled hole to be oversized by what amount?

1. 0.006 in.
2. 0.008 in.
3. 0.010 in.
4. 0.011 in.

2-68. Drilling with a twist drill that has cutting edges of different angles or unequal length will produce what condition?

1. A rough finish
2. An oversized hole
3. An undersized hole
4. A warped workpiece

2-69. What type of shank is found on a reamer designed for use in a drill press or lathe?

1. Straight
2. Tapered
3. Fluted
4. Splined

2-70. What is the rate of taper of a taper pin reamer?

1. 1 in. per foot
2. 1/3 in. per foot
3. 1/4 in. per foot
4. 1/8 in. per foot

2-71. Which of these items is NOT used to make an angular hole by the Watts method?

1. A floating chuck
2. A broach
3. A guide plate
4. A drill press

ASSIGNMENT 3

Textbook Assignment: "Offhand Grinding of Tools and Selection of Carbide Tooling," chapter 5, and "Engine Lathes," chapter 6, pages 6-1 through 6-18.

3-1. The number A100D15V identifies which of the following characteristics?

1. Coarse grit and dense structure
2. Fine grit and open structure
3. Hard bond and aluminum oxide abrasive
4. Soft bond and silicon carbide abrasive

3-2. What abrasive should be used to grind steel and steel alloys?

1. Silicon carbide
2. Corundum
3. Diamond
4. Aluminum oxide

3-3. Normally, a grinding wheel installed on a bench grinder should NOT exceed what thickness?

1. 1 in.
2. 7/8 in.
3. 1/2 in.
4. 1/4 in.

3-4. A hard grade grinding wheel has which of the following qualities?

1. A large number of strong abrasive grains
2. A small amount of bond surrounding the abrasive grains
3. Thick bond posts and great resistance to grinding pressure
4. Thin bond posts offering greater resistance to grinding pressure

3-5. What station in the standard marking system indicates the strength of a grinding wheel?

1. Bond type
2. Bond grade
3. Grain size
4. Structure

3-6. A diamond grinding wheel marked D100C50B 1/8" has which of the following characteristics?

1. It is 1/8 inch wide
2. It contains manufactured abrasive
3. Its bond is not modified
4. It has a grit size of 50

3-7. You should use what type of grinding wheel to grind high-speed steel?

1. Silicon carbide
2. Diamond
3. Corundum
4. Aluminum oxide

3-8. A grinding wheel gives off a dull thud when tapped with a piece of hard wood. What problem is indicated?

1. Out of roundness
2. Warping
3. Invisible cracks
4. Excessive moisture

3-9. The use of a coolant allows you to use what grade of grinding wheel?

1. Softer
2. Harder
3. Thicker
4. Open

3-10. Thin cutoff wheels should be stored without any separators or blotters between them.

1. True
2. False

3-11. When finish grinding a carbide tool bit, you should use which of the following grinding wheels?

1. Silicon carbide
2. Diamond impregnated
3. Aluminum oxide
4. Emery

3-12. You are grinding a carbide tool bit on a carbide grinder. Irregular coolant flow will cause what problem with the tool bit?

1. Cratering
2. Edge wear
3. Cracking
4. Softening

3-13. When installing a grinding wheel on a spindle, you should use flanges and cardboard or rubber washers for what purpose?

1. To remove play of the wheel on the spindle
2. To distribute even pressure and dampen vibration
3. To hold the wheel on the spindle
4. To grip the wheel so it can rotate with the spindle

3-14. Leaving part of a grinding wheel soaking in coolant will cause what problem?

1. Imbalance
2. Out-of-roundness
3. A grooved grinding surface
4. Cracks

3-15. A high-speed tool bit is most effective on interrupted cuts when it contains what element?

1. Tungsten
2. Vanadium
3. Chromium
4. Molybdenum

3-16. A chip breaker grinder uses what type of grinding wheel?

1. Silicon carbide
2. Aluminum oxide
3. Emery
4. Diamond

3-17. What process is used to manufacture cemented carbide cutting tools?

1. Welding
2. Compressing powders and sintering
3. Electrolyzing
4. Thermal spraying

3-18. A 50 percent increase in cutting speed will decrease a carbide tool bit's life by what percent?

1. 65
2. 70
3. 80
4. 90

3-19. What material is most widely used for cutting tools used in the machining industry?

1. Cemented carbide
2. High-speed steel
3. Ceramic
4. Diamond

3-20. Carbide insert breakdown is most frequently caused by what problem(s)?

1. Edge wear and cratering
2. Too slow a speed
3. Too much feed
4. Lack of rigidity

3-21. When the radii on your carbide insert is too large, it can cause what problem?

1. Chipping
2. Edge wear
3. Chatter
4. Cratering

3-22. What shape of carbide insert is the strongest?

1. Square
2. Round
3. Hexagonal
4. Triangular

3-23. To help them resist cratering and edge breakdown, some carbide inserts are given a coating of what type of carbide?

1. Cobalt
2. Titanium
3. Tantalum
4. Tungsten

3-24. If the cutting edge of your carbide insert is chipped or broken, you should take which of the following actions?

1. Increase the speed
2. Change to a positive rake insert
3. Change to a softer grade insert
4. Increase the feed

3-25. You are machining carbon steel and you start to get buildup on your insert. You should switch to what type of insert?

1. Negative rake
2. Round
3. Square
4. Positive rake

3-26. A ceramic cutting tool can machine metals that are too hard for carbide tools.

1. True
2. False

3-27. The cutting edges of a carbide insert should be what length?

1. 2 times the length of the toolholder
2. 1/2 the length of the cutting edge engagement
3. 1/10 the size of work
4. 1 1/2 times the length of the cutting edge engagement

3-28. When machining with a ceramic cutting tool, you should NEVER take what type of cut?

1. Light
2. Continuous
3. Fast
4. Interrupted

3-29. The diamond wheel on a chip breaker grinder may also be used to grind what type of cutting tool?

1. High-speed
2. Cobalt
3. Carbide
4. Ceramic

3-30. Which of the following lathe tools should be used to machine a groove?

1. Cutoff
2. Threading
3. Turning
4. Facing

3-31. A left-hand or right-hand facing tool has a sharp point for what purpose?

1. To cut inside threads
2. To cut outside threads
3. To machine square corners
4. To machine necks

3-32. A round-nosed turning tool that is ground flat on top is usually fed in what direction?

1. Right to left
2. Left to right
3. Either 1 or 2 above
4. Away from the lathe center

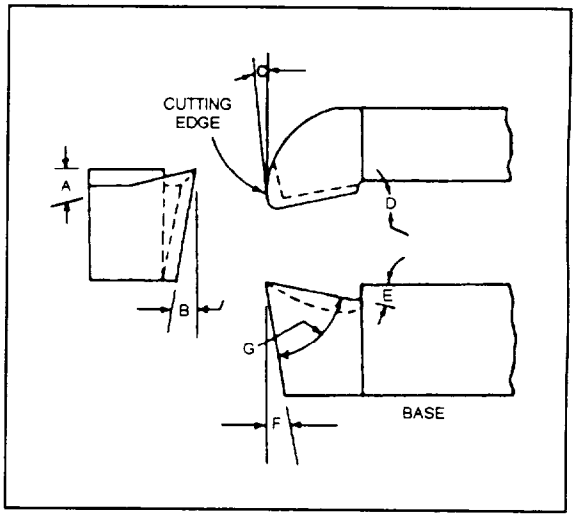

Figure 3A

IN ANSWERING QUESTIONS 3-33 THROUGH 3-35, REFER TO FIGURE 3A.

3-33. Which angle is the side rake angle?

1. A
2. B
3. C
4. D

3-34. Which angle is the end relief angle?

1. A
2. B
3. F
4. G

3-35. Which angle is the back rake angle?

1. D
2. E
3. F
4. G

3-36. When you are using a quick change tool post and toolholder instead of a standard toolholder, which of the following angles will change?

1. Nose
2. Side rake
3. Side cutting edge
4. End relief

3-37. When grinding a lathe tool bit, you should perform what step last?

1. Grind the top
2. Hone the cutting edges
3. Grind the radius
4. Measure the width

3-38. What angle is less on a shaper tool bit than on a lathe tool bit?

1. Relief
2. Nose
3. Top
4. Back

3-39. The included angle of a center punch should be ground to what angle?

1. 30°
2. 45°
3. 60°
4. 90°

3-40. The cutting edge of a general-use metal-cutting chisel is ground to a 60° included angle. To cut harder material, what change should be made to the cutting edge?

1. Heat treat it
2. Increase its angle
3. Lubricate it
4. Decrease its angle

3-41. The cutting lip angle of a twist drill is normally checked with what gauge?

1. Cutter clearance
2. Center
3. Drill-point
4. Vernier height

3-42. Too little or no lip clearance on a twist drill will cause the drill to

1. dig in
2. drill too fast
3. chatter
4. fail to drill

3-43. The point of a general purpose twist drill is ground to what included angle?

1. 45°
2. 59°
3. 90°
4. 118°

3-44. You are drilling brass with a twist drill and it has a tendency to be sucked into the brass. What part of the drill can you grind slightly flat to correct this problem?

1. The web
2. The point
3. The flute
4. The shank

3-45. The swing of a 16-inch by 8-foot lathe is 8 feet.

1. True
2. False

3-46. What are the shapes of the ways of a typical lathe?

1. Square or curved
2. Curved or V-shaped
3. V-shaped or flat
4. Flat or square

3-47. Power is applied to the workpiece on a lathe through what part of the lathe?

1. The tailstock spindle
2. The headstock spindle
3. The crossfeed screw
4. The dead center

3-48. A lathe headstock spindle has a hole running through its center for what purpose?

1. To permit bars or rods to pass through the spindle
2. To improve the cooling of the gearbox
3. To permit thorough lubrication of the spindle bearings
4. To dissipate heat from the cutting tool

3-49. The distance between centers on an engine lathe may be adjusted by moving what part (s)?

1. The headstock only
2. The tailstock only
3. The tailstock and headstock
4. The carriage

3-50. Rotation of the tailstock handwheel on an engine lathe results in movement of what part of the tailstock?

1. The base
2. The spindle-adjusting screw
3. The top
4. The clamp bolt

3-51. When an engine lathe is used for milling, the workpiece is mounted on what part of the lathe?

1. The headstock
2. The tailstock spindle
3. The carriage
4. The faceplate

3-52. On an engine lathe, the carriage is usually locked in position to perform which of the following operations?

1. Turning
2. Facing
3. Boring
4. Drilling

3-53. The apron is driven by what part of the lathe?

1. The feed rod
2. The change gear
3. The spindle
4. The back gear

3-54. What part of an engine lathe is attached directly to the crossfeed slide of the carriage?

1. The cutting tool
2. The workpiece
3. The tool post
4. The compound rest

3-55. The half-nut in the apron is engaged with the lead screw when an engine lathe is used for what purpose?

1. Turning
2. Facing
3. Boxing
4. Threading

3-56. Each gear in a quick-change gear box cluster has what unique difference?

1. Bore size
2. Thickness
3. Gear ratio
4. Color

3-57. A lathe you are working on is equipped with a quick-change gear box and a sliding compound gear. One lever on the gearbox has three possible positions while the other lever has six positions. How many screw speeds are available?

1. 6
2. 18
3. 3
4. 36

3-58. Feeds on the quick-change gear box are identified in terms of ten thousandths of an inch per

1. second
2. minute
3. spindle revolution
4. feed rod revolution

3-59. What method is used to cut the seating area of a globe valve disk?

1. Tail stock setover
2. Compound rest
3. Taper attachment
4. Forming tool

3-60. The tool post is used only to provide rigid support for the toolholder.

1. True
2. False

3-61. What type of work is done on a lathe with the help of a knurling tool attachment?

1. Trimming an oversize metal workpiece
2. Roughing the surface of a round metal workpiece
3. Threading the outside of a solid metal workpiece
4. Threading the inside of a solid metal workpiece

3-62. What type of toolholder is most widely used?

1. Boring bar
2. Standard
3. Insert
4. Quick-change

3-63. Workpieces that have irregular cross sections are held in what type of lathe chuck?

1. Scroll
2. 4-jaw
3. Standard collet
4. Hexagonal collet

3-64. For precision turning of small work, what type of lathe chuck is preferred?

1. Combination
2. Universal
3. Independent
4. Draw-in collet

3-65. To automatically center round workpieces of many sizes, what type of lathe chuck is preferred?

1. Scroll
2. 4-jaw
3. Standard collet
4. Hexagonal collet

3-66. Draw-in collet chuck collets are manufactured in what increments?

1. 1/64 in.
2. 1/32 in.
3. 1/16 in.
4. 1/8 in.

3-67. What is the main difference between a tailstock center and a headstock center?

1. Shank taper
2. Point taper
3. Metal hardness
4. Diameter

3-68. The point of a Morse taper center is ground to what included angle?

1. 30°
2. 45°
3. 60°
4. 75°

3-69. A lathe drive plate is primarily used for what purpose?

1. To drill holes
2. To drive work
3. To cut keyways
4. To drive the thread rod

3-70. A follower rest is used on a lathe to prevent what problem?

1. Springing of the work
2. Improper centering of the work
3. Irregular feed pressure in thread cutting
4. Out-of-round turning of the work

3-71. You should use a center rest for support on which of the following lathe jobs?

1. Long workpieces
2. Workpieces being machined to a noncircular cross section
3. Hexagonal workpieces
4. Workpieces that have no indented centers

3-72. A hardened tailstock center for an engine lathe is identified by what mark?

1. A longitudinal cut
2. A dimple
3. A circular groove
4. A punched depression

3-73. A portable grinding machine attaches to what part of a lathe?

1. The cross slide
2. The apron
3. The ways
4. The compound rest

3-74. A carriage stop may be used on an engine lathe to remove the need for what operation?

1. Manual operation at the end of a cut
2. Repeated measurements of the same dimension
3. Setup measurements made directly on the workpiece
4. Variable rates of feed across a workpiece

3-75. The dial of a thread dial indicator is geared to what part of a lathe?

1. The feed rod
2. The lead screw
3. The tailstock screw
4. The compound rest screw

ASSIGNMENT 4

Textbook Assignment: "Engine Lathes." chapter 6, pages 6-19 through 6-60.

4-1. The depth of a cut made by a milling attachment on an engine lathe is controlled by the

1. lead screw
2. cross feed
3. tailstock position
4. longitudinal feed

4-2. What type of lathe is constructed in such a way that a piece can be removed from its bed to accommodate work of large diameter?

1. A general-purpose screw cutting precision lathe
2. A toolroom lathe
3. A gap lathe
4. A bench lathe

4-3. What tool should you use to remove burrs in the tailstock spindle of a lathe?

1. A grinder
2. A tail center coated with lapping compound
3. A 60° taper reamer
4. A Morse taper reamer

4-4. The workpiece is mounted on the carriage in which of the following lathe operations?

1. Turning
2. Facing
3. Threading
4. Milling

4-5. You must center drill a long piece of round stock that is too large to be passed through the spindle. What lathe attachment is used to support the end being center drilled?

1. A follower rest
2. A center rest
3. A ball bearing center
4. A dead center

4-6. To correct misalignment of lathe centers, you should adjust what part of the lathe?

1. The headstock
2. The ways
3. The tailstock
4. The spindle

4-7. A lathe center is machined to what angle from the axis of the spindle?

1. 15°
2. 30°
3. 45°
4. 60°

4-8. When you use a quick-change tool-holder, tool overhang should NOT exceed what length?

1. Twice the length of the holder
2. Twice the width of the holder
3. Three times the width of the cutting tool
4. Twice the width of the cutting too1

4-9. In a properly formed center hole. the lathe centers rest against what area?

1. The bottom of the drilled hole
2. The sides of the countersunk hole
3. The inner rim of the countersunk hole
4. The outer rim of the countersunk hole

4-10. What is the most accurate method of placing a center hole in a shaft?

1. Boring
2. Drilling
3. Reaming
4. Inserting

4-11. Which of the following workpieces should be turned on a soft mandrel?

1. A plastic gear blank for a 1/4-inch shaft
2. A brass pulley for a 1/2-inch shaft
3. A steel collar with a nonstandard inside diameter
4. A steel spindle with a nonstandard outside diameter

4-12. The size of a mandrel is always marked on what area?

1. The small end inside diameter
2. The large end inside diameter
3. The small end
4. The large end

4-13. Driving torque is usually applied to a mandrel through what lathe accessory?

1. A live center
2. A lathe dog
3. A collet chuck
4. A drill chuck

4-14. The centering of a rough casting in a 4-jaw independent chuck should be checked by what method?

1. Take a light test cut
2. Hold a piece of chalk against the rotating work
3. Bring the tail center against the face of the work
4. Locate the axis of the cylindrical portion with a combination square

4-15. Several duplicate pieces of work may be held on what type of mandrel?

1. Expansion
2. Eccentric
3. Commercial
4. Gang

4-16. When using a 4-jaw chuck and you have a very small run-out tolerance, you should use what gauge to true the work?

1. A dial indicator
2. A dial vernier
3. A center gauge
4. An edge finder

4-17. When work is held in a draw-in collet chuck for precise machining, what is the maximum allowable difference between the diameter of the collet and the diameter of the work?

1. 0.00001 in.
2. 0.0001 in.
3. 0.001 in.
4. 0.002 in.

4-18. When you chuck a thin-walled cylinder in a lathe, you should take which of the following precautions?

1. Insert paper or shim stock under the chuck jaws
2. Expand the chuck jaws against the bore of the work
3. Use only enough jaw pressure to prevent slipping
4. Adjust the jaws individually to prevent distortion

4-19. When mounting irregularly shaped work on a lathe, you can use an angle plate in conjunction with a faceplate.

1. True
2. False

4-20. To keep work from slipping, it is good practice to place what material between the work and the faceplate?

1. Wood
2. Rubber
3. Paper
4. Felt

4-21. Cutting speeds on a lathe are stated in what units.

1. Revolutions per minute
2. Feet per minute
3. Inches per revolution
4. Thousandths per revolution

4-22. A 1-inch piece of round stock that has a cutting speed of 100 feet per minute should be run at approximately what speed?

1. 382 rpm
2. 400 rpm
3. 764 rpm
4. 1200 rpm

4-23. To offer the greatest support, a center rest should be placed in what position?

1. Near the tailstock
2. In the middle of the work
3. Near the headstock
4. On top of the work

4-24. For greater accuracy when facing a workpiece to a given thickness, you should set the compound rest at what angle?

1. 10°
2. 15°
3. 30°
4. 45°

4-25. A depth of cut of 0.040 inch reduces the diameter of a lathe workpiece what amount?

1. 0.020 in.
2. 0.040 in.
3. 0.080 in.
4. 0.120 in.

4-26. Which of the following lathe operations requires the highest cutting speeds?

1. Rough facing
2. Rough turning
3. Thread cutting
4. Finish turning

4-27. Which of the following is NOT an advantage of using coolant?

1. A heavier feed
2. A heavier depth of cut
3. Prolonged cutting tool life
4. A slower speed

4-28. Which of the following actions will help stop chatter in a lathe tool bit?

1. Increase speed
2. Strengthen the tool support train
3. Decrease feed
4. Grind a larger radius on the tool bit

4-29. You are rough turning a shaft on a lathe. You should leave the diameters oversize by what amount for finishing?

1. 1/64 in.
2. 1/32 in.
3. 1/16 in.
4. 1/8 in.

4-30. Shoulders are commonly located with a parting tool to eliminate the need for what process?

1. Using a pointed turning tool
2. Facing the shoulder
3. Cutting a fillet
4. Detailed measuring of lengths during turning

4-31. A parting tool is set at what angle from the center line?

1. 30°
2. 45°
3. 60°
4. 90°

4-32. Failure to apply enough feed pressure to a drill bit is likely to cause what problem?

1. An overheated drill
2. Chatter
3. A damaged workpiece
4. A broken bit

4-33. When a boring bar is mounted between centers on a lathe, you should use which of the following feeds?

1. Compound-rest
2. Cross
3. Longitudinal
4. Both 2 and 3 above

4-34. You plan to machine ream a 1.000 inch hole. You should first bore the hole undersize by what amount?

1. 1/64 in.
2. 1/32 in.
3. 1/16 in.
4. 1/8 in.

4-35. In roughing and knur1ing a metal, the roughing speed should be in what relation to the knurling speed?

1. One-halt
2. Equal to
3. Two-times
4. Three times

4-36. When you operate a toolpost grinder, excessize speed will cause which of the following problems?

1. Overheated work
2. An overheated grinding wheel
3. Oversized work
4. Chatter

4-37. What type of wheel dresser is used to dress a toolpost grinding wheel?

1. Carbide
2. Aluminum oxide
3. Diamond
4. Ceramic

4-38. The spindle speeds of a toolpost grinder are changed by what means?

1. An electric switch
2. Various sizes of pulleys
3. Change gears
4. Various sizes of spindles

4-39. What area of the toolpost grinder is used to center it on the lathe?

1. The housing
2. The spindle center hole
3. The motor
4. The ways

4-40. When setting over the tailstock to cut a taper, you should use what gauge for the final adjustment?

1. A bevel protractor
2. A sine bar
3. A dial indicator
4. A vernier height gauge

4-41. What taper has the greatest included angle?

1. Brown and Sharp
2. Morse
3. Milling machine
4. Pipe

4-45. A 4-inch long tapered workpiece has a diameter of 3 inches on one end and 3 3/8 inches on the opposite end. What is the taper per foot of this workpiece?

1. 1 1/8 in.
2. 1/8 in.
3. 3/8 in.
4. 1/2 in.

4-43. Short, steep tapers are usually cut on a lathe by using which of the following methods?

1. Taper-attachment
2. Compound-rest
3. Offset-center
4. Simultaneous-feed

4-44. To accurately bore a long taper on a lathe, what method is best?

1. Plunge-cut
2. Tailstock-setover
3. Taper-attachment
4. Compound-rest

4-45. When the taper attachment is used on a lathe, the depth of cut is controlled by what screw?

1. Lead
2. Crossfeed
3. Compound-rest feed
4. Longitudinal feed

4-46. The accuracy of a bored taper should be checked with which of the following gauges?

1. A bevel protractor
2. An inside micrometer
3. A dial-indicator cylinder gauge
4. A plug gauge

4-47. When you bore a taper with a tool bit that is off center, it will cause which of the following problems?

1. An inaccurate taper
2. Overheating
3. A broken tool bit
4. An off-center hole

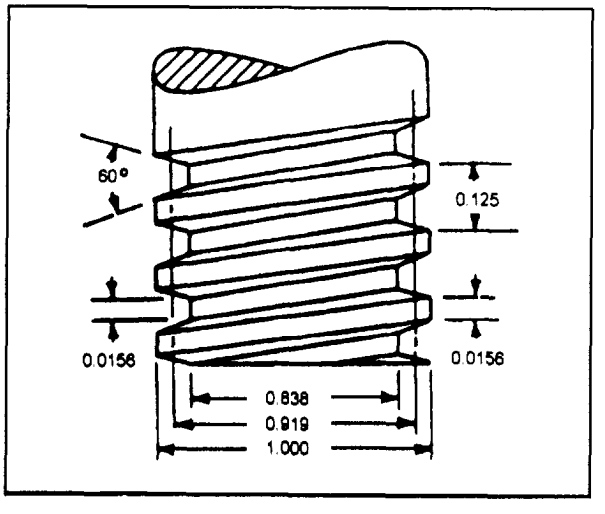

Figure 4A

IN ANSWERING QUESTIONS 4-48 THROUGH 4-50, REFER TO FIGURE: 4A.

4-48. What is the pitch of the screw thread?

1. 0.0625 in.
2. 0.125 in.
3. 0.162 in.
4. 0.919 in.

4-49. What dimensions of the thread are equal?

1. The crest width and root width
2. The crest width and half pitch
3. The crest diameter and root diameter
4. The root diameter and pitch diameter

4-50. What is the major diameter of the thread?

1. 0.125 in.
2. 0.838 in.
3. 0.919 in.
4. 1.000 in.

4-51. What is the slant depth of an American Standard (external) thread with 10 threads per inch?

1. 0.0613 in.
2. 0.0750 in.
3. 0.1000 in.
4. 0.6250 in.

4-52. What instrument is used to set a V-form threading tool true with the work?

1. A bevel protractor
2. A screw pitch gauge
3. A center gauge
4. A thread dial indicator

4-53. Failure to set a threading tool perpendicular to the work axis will cause which of the following problems?

1. The pitch will be too large
2. The pitch diameter will be too small
3. The helix angle will be too short
4. The angle of the thread will be incorrect

4-54. What is the included angle of an Acme screw thread?

1. 14°
2. 29°
3. 30°
4. 45°

4-55. Square threads are used for which of the following applications?

1. Lead screws
2. Body bond studs
3. Jack screws
4. Jeweler's screws

4-56. To cut square threads with a 1/4-inch pitch on a screw, you should use a tool with what cutting edge width?

1. 0.125 in.
2. 0.127 in.
3. 0.500 in.
4. 0.502 in.

4-57. A tapered pipe thread has what amount of taper?

1. 1/8 in. per ft
2. 1/4 in. per ft
3. 1/2 in. per ft
4. 3/4 in. per ft

4-58. The tolerance of a thread increases as the class number increases?

1. True
2. False

4-59. What method of checking the fit of threads is the most accurate?

1. A go no-go gauge
2. A thread micrometer
3. Wires
4. A screw pitch gauge

4-60. When a thread micrometer is not available, you can measure the pitch diameter of a V-form thread with what gauge?

1. A depth micrometer
2. A feeler gauge
3. An ordinary micrometer and three wires
4. A plug gauge

4-61. When you are cutting V-form threads, it is customary to place the compound rest of the lathe at what angle?

1. 14 1/2°
2. 29 1/2°
3. 30°
4. 45°

4-62. When cutting internal threads on a long shaft, you should use what lathe attachment?

1. Follower rest
2. Tailstock
3. Steady rest
4. Six-jaw chuck

4-63. When you are threading and a tool bit becomes misaligned, you should turn what screws to correct the problem?

1. Compound rest and lead
2. Cross feed and lead
3. Compound rest and cross feed
4. Compound rest and tailstock

4-64. What gauge is used to accurately count fine pitches of screw threads?

1. Ruler
2. Screw pitch
3. Protractor
4. Micrometer

4-65. A very light cut is usually turned on the surface of work that is to be threaded to check what measurement?

1. The thread angle
2. The root diameter
3. The pitch
4. The crest width

4-66. What part of a lathe is used to determine when to engage the half-nuts?

1. The lead screw
2. The micrometer collar
3. The thread stop
4. The thread dial

4-67. To cut odd-numbered threads, the half-nuts are engaged at any numbered line.

1. True
2. False

4-68. The most common chamfer used to finish the thread of a capscrew has what angle?

1. 15°
2. 30°
3. 45°
4. 60°

4-69. To cut a thread with a triple lead and 18 threads per inch, you should set up the lathe to cut how many threads per inch?

1. 6
2. 12
3. 18
4. 54

4-70. When cutting multiple-lead threads on a faceplate, the number of leads that you can cut is determined by what characteristic of the face plate?

1. Diameter
2. Number of slots
3. Thickness
4. Length

ASSIGNMENT 5

Textbook Assignment: "Milling Machines and Milling Operations," chapter 7.

5-1. When only one type of knee and column milling machine can be installed. It will usually be what type?

1. Bed
2. Vertical spindle
3. Universal
4. Plain

5-2. A universal milling machine has what main advantage over the vertical spindle and plain type?

1. The table moves in two directions
2. The table swivels on the saddle
3. The construction is more rigid
4. The spindle is on a horizontal axis

5-3. What milling machine is the most efficient for taking deep cuts at rapid rates of feed and speed?

1. Plain
2. Universal
3. Universal with a high-speed vertical milling attachment
4. Vertical spindle

5-4. The spindle can be fed into the work on what type of milling machine?

1. Universal
2. Plain
3. Bed
4. Vertical spindle

IN ANSWERING QUESTIONS 5-5 THROUGH 5-8, MATCH EACH COMPONENT IN COLUMN A WITH ITS DESCRIPTION IN COLUMN B.

A. COMPONENTS	B DESCRIPTIONS
5-5. Column	1. The support for the table and saddle
5-6. Knee	
5-7. Saddle	2. A movable support to which the workpiece is fastened
5-8. Table	
	3. Used to position the work closer to, or farther from, the column
	4. The main casing

5-9. The cutting tool of a milling machine is driven by what component?

1. A work holder
2. The overarm dovetail
3. An arbor support
4. The spindle

5-10. The size of a milling machine is determined by what factor?

1. The height of the main casing in feet
2. The longitudinal table travel in inches
3. The length of the table in inches
4. The surface area of the table in feet

5-11. Which of the following vises provides the least rigidity?

1. Swivel
2. Plain
3. Toolmaker's universal
4. Plain flanged swivel

5-12. The outer end of an arbor is aligned with the spindle by what milling machine component?

1. The overarm
2. The column
3. The knee
4. The arbor support

5-13. The base of a rotatable toolmaker's knee is graduated in what increments?

1. Degrees
2. Seconds
3. Inches
4. Thousandths of an inch

5-14. What milling machine attachment is used to hold stock being machined into a gear?

1. A swivel vise
2. A universal vise
3. A dividing head
4. A center rest

5-15. When cutting a helical gear, the shortest lead possible is provided by what drive mechanism?

1. The low lead drive
2. The long and short lead drive
3. The enclosed driving mechanism
4. The helical drive unit

5-16. Rapid indexing is accomplished by what means?

1. An index head sector
2. A direct index plate
3. A universal dividing head
4. A compound index plate

5-17. Eight complete turns of the index crank will move a universal dividing head spindle what fraction of a revolution?

1. 1/40
2. 1/8
3. 1/5
4. 1/3

5-18. You are given a piece of work to divide into 12 parts and you have a 24-hole index plate available. To make each division, you should revolve the index crank on the index plate what amount?

1. 1 complete turn and 3 holes
2. 1 complete turn and 8 holes
3. 3 complete turns and 3 holes
4. 3 complete turns and 8 holes

5-19. You are given a piece of work that is to be divided into 960 parts and you have a 24-hole index plate available. To make each division, you should revolve the index crank on the index plate what amount?

1. 1 hole
2. 2 holes
3. 6 holes
4. 12 holes

5-20. You are using a 27-hole index plate. To move the circumference of the work ll°, you should turn the index crank what amount?

1. 1 turn and 2 holes
2. 1 turn and 4 holes
3. 1 turn and 6 holes
4. 1 turn and 8 holes

5-21. You are using a 21-hole index plate. To move the circumference of the work 180 minutes, you should turn the index crank what number of holes?

1. 6
2. 7
3. 3
4. 9

5-22. You are differental indexing for 72 divisions. Your selected number is 10. In a 21-hole circle index plate, you should turn the index crank what number of holes?

1. 8
2. 2
3. 12
4. 4

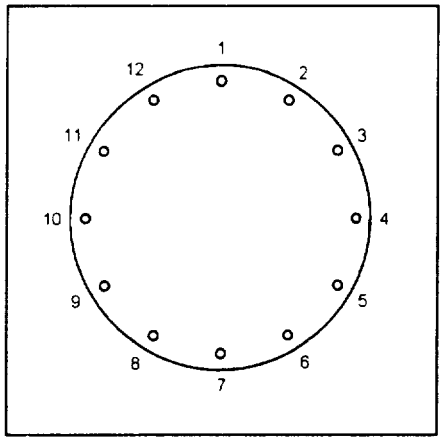

Figure 5A.--12 hole circle.

IN ANSWERING QUESTION 5-23, REFER TO FIGURE 5A.

5-23. Five holes are required for indexing and the index pin is inserted into hole 1. In a 12-hole circle, what hole should be covered by the right arm of the index sector?

1. Hole 5
3. Hole 6
3. Hole 7
4. Hole 8

5-24. Plain milling cutters have what principal characteristic?

1. They have teeth on the circumference only
2. They have only straight teeth
3. They always have helical teeth
4. They have teeth on the end only

5-25. Cutters are attached to what part(s) of a milling machine?

1. A plain arbor or arbor yoke
2. A screw arbor
3. A collet or adapter
4. An arbor or directly to the spindle

5-26. What type of cutter is ground thinner toward its center to provide clearance between the cutter and the work?

1. A plain milling cutter
2. A side milling cutter
3. A metal slitting saw
4. A shell and mill

5-27. What type of cutter can be used in pairs to mill slots?

1. Half-side milling cutters
2. Side milling clutters with interlocking teeth
3. Metal slitting saws
4. Half-side milling cutters with a metal slitting saw between

5-28. Dovetail ways are cut with what type of milling cutter?

1. A side milling cutter
2. A metal slitting saw
3. A slotting cutter
4. An angle cutter

5-29. Shell end mills usually have what type of teeth?

1. Straight
2. Helical
3. Concave
4. Convex

5-30. What type of end mill can be fed into the work like a drill?

1. Shell
2. Two-flute
3. Multiple-flute
4. Convex

5-31. Woodruff keyseat cutters less than 1/2 inch in diameter usually have a/an

1. arbor
2. shank
3. stub arbor
4. arbor support

5-32. What type of cutter can be manufactured locally to cut a variety of forms?

1. A fly cutter
2. A corner-rounding cutter
3. A convex cutter
4. A gear hub

5-33. For milling thin material, you should select what type of cutter?

1. Coarse-tooth
2. Fine-tooth
3. Straight
4. Helical

5-34. Before you tighten or loosen the arbor nut, what milling machine component must be in place?

1. The saddle
2. The trip dog
3. The feed dial
4. The arbor support

5-35. Plain milling is the process of milling a flat surface in a plane parallel to the cutter axis.

1. True
2. False

5-36. When setting up a milling machine, you should determine that the surface of the work is just touching the teeth of the cutter by what method?

1. Insert a thin feeler gauge between the teeth of the cutter and the work
2. Raise the work until the cutter stops it, then back off slightly
3. With the cutter turning slowly, bring the work up until it stops the cutter
4. With a piece of paper on the work surface, raise the work until the rotating cutter pulls the paper

5-37. When face milling, you should feed the work so the cutter thrust will force the work in what direction?

1. Down
2. Up
3. Left
4. Right

5-38. Which of the following cutters is NOT used for face milling?

1. Face milling cutter
2. Straight-shank end mill
3. Slotting cutter
4. Shell end mill

5-39. You are milling using an indexing head with a screw-on chuck. In what direction should the cutter rotary thrust be applied to the chuck?

1. Toward the index head
2. So it will tighten the chuck
3. Toward the column
4. To the left

5-40. What is the largest hexagon you can cut from a 2-inch piece of round stock?

1. 1.414 in.
2. 1.732 in.
3. 2.000 in.
4. 3.110 in.

5-41. What is the largest square you can cut from a 3-inch piece of round stock?

1. 1.732 in.
2. 2.110 in.
3. 2.121 in.
4. 2.598 in.

5-42. The cutter should be as close as possible to the column of the milling milling machine for what reason?

1. Rigidity
2. Clearance
3. Machinability
4. Maximum speed

5-43. The rotary motion of a milling machine spindle is changed to a reciprocating motion by using what attachment?

1. Index head
2. Slitting saw
3. Slotting
4. Sawing

IN ANSWERING QUESTIONS 5-44 THROUGH 5-46, MATCH THE TYPE OF SLITTING SAW IN COLUMN A THAT SHOULD BE USED TO CUT THE MATERIAL IN COLUMN B.

A. SLITTING SAWS	B. MATERIALS
5-44. Fine tooth	1. Brass
5-45. Coarse tooth	2. Thick steel
5-46. Staggered tooth	3. Thin steel sheet
	4. Carbide

5-47. It is easiest to machine an external keyway on what machine?

1. Shaper
2. Milling machine
3. Jumping jack
4. Lathe

5-48. When you plan to use a fly cutter as a formed cutter, why should you rough out the surface with an ordinary cutter?

1. To obtain a smoother surface
2. To save time since the fly cutter is not as fast
3. To reduce the load on the fly cutter arbor
4. To increase the chip load

5-49. The cutting tools used for boring on a milling machine resemble what other type of cutter?

1. End mill
2. Shell end mill
3. Slot cutter
4. Fly cutter

5-50. The greatest variation in the angle at which the cutter can be set is provided by which of the following milling machine attachments'?

1. Universal milling
2. Compound vertical milling
3. Angular milling
4. Circular milling

5-51. The high-speed universal milling attachment can be swiveled what maximum number of degrees?

1. 90°
2. 180°
3. 270°
4. 360°

5-52. Carbide cutters can be operated at how many times the speed of high-speed cutters?

1. 6
2. 2
3. 3
4. 4

5-53. A 3/4-inch cutter that will be run at 65 fpm has what approximate spindle speed?

1. 248 rpm
2. 257 rpm
3. 331 rpm
4. 341 rpm

5-54. What is the approximate cutting speed of a 1 1/4-inch cutter running at 140 rpm?

1. 43.2 fpm
2. 44.3 fpm
3. 45.8 fpm
4. 46.9 fpm

5-55. What rates of speed and feed are best for roughing?

1. Low speed and low feed
2. Low speed and high feed
3. High speed and high feed
4. High speed and low feed

5-56. To mill a metal to a fine finish, you should use what cutter speed and feed?

1. High cutter speed and slow feed rate
2. Low cutter speed and high feed rate
3. Low cutter speed and slow feed rate
4. High cutter speed and high feed rate

5-57. When using a periphery milling cutter, you should apply the coolant to what area?

1. The point at which the tool leaves the work
2. On the work
3. The point at which the tool engages the work
4. The middle of the cutter

ASSIGNMENT 6

Textbook Assignment: "Shapers, Planers, and Engravers," chapter 9, and "Precision Grinding Machines," chapter 10.

6-1. The size of a shaper is determined by what factor?

1. The size of the cutter
2. The depth of the stroke
3. The size of the motor
4. The maximum size of a cube it can machine

6-2. What mechanism is used to drive the ram of a crank shaper?

1. A hydraulic cylinder
2. A rack and spur gear
3. A rocker arm
4. A pushrod and camshaft

6-3. What happens when you set the crankpin of a shaper off center?

1. The rocker arm is prevented from moving when you turn the crank gear
2. The rocker arm moves when you turn the crank gear
3. The ram is positioned
4. The table is positioned horizontally

6-4. When using a shaper to make an internal cut, you should use what toolholder?

1. Left-hand
2. Gang
3. Swivel-head
4. Extension

6-5. You have to cut a large deep channel into a piece of steel using a shaper. The channel will require machining on the bottom and both sides. You should use what toolholder?

1. Straight
2. Swivel-head
3. Spring
4. Extension

6-6. What should you do to prevent the tool bit from digging into the work on the return stroke of a vertical cut?

1. Fit a hooked tool in the toolhead
2. Lower the work on the return stroke
3. Raise the tool bit on the return stroke
4. Swivel the clapper box to the side

6-7. The direction or feed on a shaper is changed by what action?

1. Adjust the feed connecting link
2. Change the nut on the saddle
3. Lift and rotate the paw1 on the table feed mechanism 1/2 turn
4. Turn the feed screw

6-8. The cutting stroke of a shaper accounts for what percentage of the total machining time?

1. 50%
2. 60%
3. 70%
4. 80%

6-9. If the cutting speed in a shaping operation is 40 feet per minute and the length of stroke is 12 inches, what is the approximate number of strokes per minute?

1. 16
2. 20
3. 24
4. 30

6-10. A shaper is likely to chatter under which of the following circumstances?

1. When the tool bit is not set properly
2. When the work is loose in the vise
3. When a formed cutter is in a left-hand holder
4. All of the above

6-11. To line up an internal keyway in a gear with the axis of the gear, what gauge should you use?

1. Micrometer
2. Feeler gauge
3. Calipers
4. Dial indicator

6-12. You are cutting an external keyway that extends part way up a shaft. To prevent the tool from binding at the end of the cutting stroke, you should take what action?

1. Use a special tool bit
2. Drill a hole at the end of the slot
3. Allow the tool bit to free itself on the return stroke
4. Raise the tool bit at the end of the cutting stroke

6-13. When a rectangular block is being shaped, what edge or surface should be shaped last?

1. A face surface
2. A side edge
3. An end edge
4. A top surface

6-14. What should you do first to rough out a piece on a shaper that will have a concave radii?

1. Control by hand the feed on all the rough cuts
2. Use automatic feed to make a series of horizontal cuts
3. Use automatic feed to make a series of vertical cuts
4. Set the horizontal and vertical feed to give the proper contour

6-15. To cut angles using a vertical shaper, you should tilt what component?

1. The rail
2. The ram
3. The table
4. The chuck

6-16. In rough cutting a rack tooth, when should you lock the graduated collar on the toolslide feed screw of the shaper?

1. After you start the shaper
2. After you bring the tool into contact with the work
3. Before you clamp the work to the vice or table
4. Before you set the graduated dial on the crossfeed screw to zero

6-17. The size of a planer is determined by what characteristic?

1. The length of stroke
2. The size of the work it will accommodate
3. The size of the motor
4. The length of the bed

6-18. The crossrail on a planer is designed to hold what component?

1. The table
2. The vise
3. The toolhead
4. The column

6-19. The columns on a planer are designed to support which of the following items?

1. The work
2. The table
3. The gear train
4. The crossrail

6-20. You should lock the vertical slide in place at what point in a planer machining operation?

1. After you make the tool setting
2. Before touching off on the work
3. Before setting the cross-slide saddle
4. After starting the cut

6-21. Cutter speed on a pantograph is affected by which of the following factors?

1. The depth of cut
2. The rate of feed
3. The type of material being cut
4. All of the above

6-22. You are using a very small cutter to engrave small letters and getting poor results. What is the most likely cause?

1. The copyholder is too hiqh
2. The cutterhead assembly is set wrong
3. The cutter is improperly qround
4. The stylus point is worn

6-23. If the length of the copy is 1.8 inches and the length of the finished job is 1.2 inches, what is the reduction?

1. 0.6
2. 1.5
3. 2.2
4. 3.0

6-24. A pantograph copyholder has what type of slot?

1. Square
2. Oval
3. Dovetailed
4. Straight

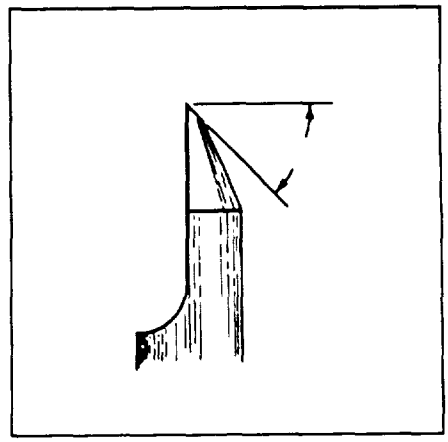

Fiqure 6A

IN ANSWERING QUESTIONS 6-25 AND 6-26. REFER TO FIGURE 6A.

6-25. What name is usually given to the indicated angle?

1. Clearance
2. Rake
3. Cutting
4. Relief

6-26. What determines the size of the indicated angle?

1. The spindle speed
2. The size of the cutter
3. The material to be cut
4. The size of the copy

6-27. A worn cutter is indicated by which of the following characteristics?

1. It turns red
2. It runs slower
3. It vibrates
4. It does not cut cleanly

6-28. If a pantograph cutter has inadequate chip clearance, what part of the cutter will rub against the work?

1. The point
2. The back side
3. The tront side
4. The rake angle

6-29. What type of dresser is used to true a pantograph high-speed cutter grinding wheel?

1. Carbide
2. Diamond
3. Oxide
4. Carbon

6-30. A concave forming guide may be used for engraving on which of the following shapes of workpieces?

1. Flat
2. Concave
3. Convex
4. All of the above

6-31. Three- or four-sided cutters are used for engraving on which of the following materials?

1. Large, heavy work
2. Very soft work
3. Small steel pieces
4. Wood

6-32. When engraving a dial face that has 10 graduations, you should rotate the rotary table how many degrees between cuts?

1. 36°
2. 45°
3. 60°
4. 72°

6-33. Which of the following changes will make a grinding wheel act "softer"?

1. Reduce the wheel diameter
2. Increase the wheel speed
3. Reduce the grain depth of cut
4. Increase the arc of contact of the wheel

6-34. What wheel speed range is most common in precision grinding?

1. 1,000 to 2,000 fpm
2. 3,000 to 4,000 fpm
3. 5,500 to 9,500 fpm
4. 9,500 to 10,500 fpm

6-35. A grinding wheel has a circumference of 18 inches and is set on a spindle whose speed is 4,000 rpm. What is its surface speed?

1. 4,500 fpm
2. 6,000 fpm
3. 7,500 fpm
4. 10,000 fpm

6-36. You are beginning to rough grind a job on a surface grinder? Your initial rough cuts should be what depth?

1. 0.002 in.
2. 0.003 in.
3. 0.005 in
4. 0.006 in.

6-37. Which of the following characteristics is NOT desirable in a cutting fluid?

1. High cooling capacity
2. High viscosity
3. Low flammability
4. Noncorrosiveness

6-38. You are taking rough cuts during surface grinding. The cross traverse table moves in what direction relative to the wheel spindle for each stroke of the sliding table?

1. Parallel to the spindle with a teed slightly less than the thickness of the grinding wheel
2. Perpendicular to the spindle with a feed equal to the diameter of the grinding wheel
3. Parallel to the spindle with a feed equal to the thickness of the workpiece
4. Perpendicular to the spindle with a feed equal to the thickness of the grinding wheel

6-39. Work will not remain in place on a magnetic chuck unless it contacts at least what number of poles?

1. 1
2. 2
3. 3
4. 4

6-40. What method is used to remove deep scratches from a magnetic chuck?

1. Planing
2. Milling
3. Sanding
4. Surface grinding

6-41. When operating a surface grinder, the grinding wheel is fed into the work by using what components?

1. The sliding table
2. The cross traverse table
3. The wheelhead
4. The traverse table

6-42. The top of the sliding table on a surface grinder has what shape of slots milled into it?

1. Dovetail
2. T
3. Concave
4. Square

6-43. You have rough ground a piece of hardened steel and you are ready to finish grind it. You should make what adjustment to the longitudinal traverse speed of the worktable?

1. Increase it from 10 fpm to 25 fpm
2. Increase it from 25 fpm to 40 fpm
3. Decrease it from 40 fpm to 35 fpm
4. Decrease it from 60 fpm to 40 fpm

6-44. The wheelhead on a cylindrical grinder has vertical movement.

1. True
2. False

6-45. What component of a surface grinder is NOT found on a cylindrical grinder?

1. A coolant system
2. A hydraulic power Unit
3. A cross traverse table
4. A wheelhead

6-46. You are setting up work on a cylindrical grinder. When should you start the coolant flow?

1. When you begin grinding the work
2. Just before you dress the wheel
3. After you have made a cleanup cut
4. As soon as you start the spindle motor and hydraulic pump

6-47. On a cylindrical grinder, the distance of longitudinal traverse per revolution of the workpiece is determined by what factor?

1. The width of the grinding wheel
2. The length of the workpiece
3. The width of the workpiece
4. The diameter of the grinding wheel

6-48. When is a cutter considered dull and in need of sharpening?

1. When the wear land is worn and rounded
2. When the wear land is between 0.010 and 0.035 inch wide
3. When the wear land becomes less than 0.010 inch wide
4. When the secondary clearance begins to rub

6-49. Grinding wheels can be mounted on both ends of the spindle on the wheelhead of a tool and cutter grinder.

1. True
2. False

6-50. What feature of a tool and cutter grinder allows you to operate it while standing in the best position to see the work?

1. A left-hand footstock and a right-hand tailstock
2. One control handwheel at the front of the grinder and another at the back
3. A column-mounted wheelhead and a double-ended spindle
4. A taper table and a sliding table

6-51. You are grinding a cutter on a tool and cutter grinder and the wheel begins to burr the edge of the cutter. How should you solve the problem?

1. Rotate the grinding wheel toward the cutting edge
2. Reduce the grinding speed
3. Increase the grinding speed
4. Decrease the speed

6-52. Which of the following cutters should be ground using a rounded tooth rest blade?

1. Straight-fluted
2. Helical-tooth
3. Side-milling
4. Plain straight-tooth

6-53. What type of tool rest blade holder has a micrometer adjustment?

1. Plain
2. Bevel
3. Angular
4. Universal

6-54. The secondary clearance angle of a milling cutter is usually larger than the primary clearance angle by what amount?

1. 1 to 3°
2. 2 to 4°
3. 3 to 5°
4. 4 to 6°

6-55. When the primary land of a milling cutter becomes too wide, what problem will usually arise?

1. The cutter will run slower
2. The heel of the cutter tooth will drag
3. The secondary land will become too wide
4. The cutter will break

6-56. When grinding a milling cutter using a straight wheel, you should change the clearance angle by what method?

1. Tilt the table
2. Raise or lower the head
3. Rotate the cutter
4. Tilt the head

6-57. You are sharpening a plain milling cutter with helical teeth and using a cup-type wheel. You should swivel the wheelhead 89° for what purpose?

1. To provide maximum compensation for wheel wear
2. To position the wheel head axis in the same horizontal plane as the axis of the footstock centers
3. To be sure the end of the cutter clears the opposite cutting face
4. To be sure the end of the cutter does not clear the opposite cutting face

6-58. To grind a cutter requiring a 5-degree clearance angle using a 6-inch diameter wheel, you should raise the wheelhead what amount?

1. 0.002 in.
2. 0.026 in.
3. 0.250 in.
4. 0.261 in.

6-59. You are using a tool and cutter grinder to sharpen the peripheral teeth on an end mill. It will be necessary to change or remove the cutter's size markings.

1. True
2. False

6-60. You are using a tool and cutter grinder to grind an involute formed cutter mounted on a mandrel. You should grind what area of the teeth first?

1. The front
2. The back
3. The face
4. The side

ASSIGNMENT 7

Textbook Assignment: "Metal Buildup," chapter 12, pages 12-8 through 12-10; "Repair Work," chapter 13. pages 13-1 through 13-8. and 13-13 through 13-20; "Gear Cutting," chapter 14, pages 14-1 through 14-5; and "Metallurgy and Heat Treatment," chapter 15. pages 15-28 through 15-30.

7-1. The most commonly used electroplating power packs have what output?

1. 60 to 100 amperes ac
2. 25 to 100 amperes ac or dc
3. 25 to 100 amperes dc
4. 60 to 100 amperes ac or dc

7-2. A contact plating tool consists of an insulated handle with a conductive core and an anode made of what material?

1. An iridium-platinum alloy
2. Graphite or high-quality carbon
3. Either a high quality graphite or an iridium-platinum alloy
4. Conductive graphite with cooling fins

7-3. What three types of solutions are used for contact plating and related operations?

1. Cleaning, activating, and plating
2. Preparatory, plating, and stripping
3. Plating, stripping, and activating
4. Stripping, cleaning, and activating

7-4. The possible uses of plating to repair worn or damaged parts is limited by what factor?

1. The weather
2. The brand of plating solution
3. Whether ac or dc power is used
4. The knowledge and skill of the operator

7-5. Electroplating operators must requalify when they have done no work for which they are qualified for at least how many months?

1. 8
2. 2
3. 12
4. 4

1-6. A dye penetrant inspection is required for what classes of plating?

1. l and 1A
2. 2 and 2C
3. 3 and 3A
4. 4 and 4B

7-7. Traceability and accuracy of instrument calibration is ensured by what Navy program?

1. COSAL
2. METCAL
3. 3-M
4. MDS

7-8. The philosophy of quality assurance is unique in that it does not recognize degrees of success.

1. True
2. False

1-9. When planning a machining job, you should take what step first?

1. Cut the stock
2. Research technical publications or blueprints for job specifications
3. Set up your machine
4. Select your tooling

7-10. Preventive maintenance does NOT include which of the following actions?

1. Taking oil samples
2. Changing filters
3. Cleaning machines
4. Changing a broken qear

7-11. To manufacture a pump shaft 20 inches long with a maximum diameter of 2 1/2 inches and a minimum diameter of 2 inches, what size round stock should you use?

1. Length 20 in., diameter 2 3/8 in.
2. Length 20 1/32 in., diameter 2 5/8 in.
3. Length 20 1/16 in., diameter 2 5/8 in.
4. Length 20 1/8 in., diameter 2 9/16 in.

7-12. What device is used to measure shaft runout?

1. A dial indicator
2. A micrometer
3. A vernier caliper
4. A steel rule

7-13. When bending a shaft to eliminate a 0.352 inch runout, you should release the ram pressure when the dial indicator indicates a bend of what amount?

1. 0.003 in.
2. 0.030 in.
3. 0.300 in.
4. 0.303 in.

7-14. The stub you make for a shaft 2 inches in diameter should have what diameter?

1. 3/8 in.
2. 1 1/4 in.
3. 2 in.
4. 2 1/4 in.

7-15. Permission to stub a shaft is qiven by what authority?

1. The division officer
2. The quality assurance officer
3. The commanding officer
4. The type commander

7-16. Small pits on a qlobe valve seat should be removed by what method?

1. Lapping
2. Grinding
3. Refacing
4. Spotting-in

7-17. An abrasive is placed between the disk and the seat of a globe valve during what valve seating operation?

1. Grinding
2. Lapping
3. Refacing
4. Machining

7-18. Which of the following operations includes coating a valve seat with prussian blue?

1. Grinding
2. Spotting-in
3. Lapping
4. Facing

7-19. The bodies of high-temperature, high-pressure valves are usually made of what material?

1. Monel
2. Alloy steel
3. Stellite
4. Bronze

7-20. When finish grinding a globe valve seat, you should use what type of abrasive compound?

1. Microscopic fine
2. Fine
3. Medium
4. Coarse

7-21. Most ball valves will open when the handwheel is turned what amount?

1. 30°
2. 45°
3. 60°
4. 90°

7-22. Why are gate valves not used for throttling?

1. They are too big
2. They vibrate when partially open
3. They open and close too slowly
4. They are made from the wrong material

7-23. The stem is attached to the gate by threads on what type of gate valve?

1. Rising stem
2. Wedge
3. Nonrising stem
4. Steam

7-24. Silver seals are used in which of the following valves?

1. Saltwater globe
2. Hydraulic
3. Pressure seal bonnet globe
4. Air

7-25. On a pump impeller. radial clearance is what fraction of the diametrical clearance?

1. 1/4
2. 1/2
3. 5/8
4. 3/4

7-26. When replacement wearing rings for a centrifugal pump have inaccurate concentricity. it is usually corrected by what method?

1. Grinding
2. Lapping
3. Machining
4. Polishing

7-27. Pressed-on shaft sleeves are removed from a pump with the aid of a

1. gear puller
2. sleeve puller
3. lathe
4. torch

7-28. Which of the following parts of a centrifugal pump usually has a renewable surface?

1. The impeller passage
2. The balance passage
3. The rotor shaft
4. The discharge passage

7-29. When drilling a hole in a stud that has been broken below the surface of the piece it was holding, you should establish the center of the stud by using what tool?

1. A drill index
2. A center punch
3. A twist drill
4. A center drill

7-30. When a tap is broken oft at or slightly below the surface of the work, you may be able to remove it with which of the following tools?

1. Pliers
2. A twist drill
3. A tap extractor
4. An easy out

7-31. As a last resort, a broken tap or stud may be removed by using what machine?

1. A drill press
2. A plating machine
3. A boring machine
4. A metal disintegrator

7-32. When using a metal disintegrator to remove a broken tap, the electrode should be what size?

1. The smallest diameter of the tap
2. The tap drill size
3. The largest diameter of the tap
4. The pitch diameter of the tap

7-33. Which of the following is NOT an example of in-place machining?

1. Resurfacing a valve flange
2. Reseating a gate valve seat
3. Boring a valve inlay area
4. Manufacturing a silver seal

7-34. When quiet operation is important, a gear should be manufactured from what material?

1. Steel
2. Nonmetallic
3. Monel
4. Brass

7-35. In spur gear terminology, what is the dedendum (DED)?

1. The circle formed by the tops of the gear teeth
2. The whole depth minus the clearance
3. The circle formed by the bottoms of the gear teeth
4. The depth of the tooth inside the pitch circle

7-36. The distance from one side of the root circle to the opposite side passing through the center of the gear is known by what term?

1. Whole depth
2. Root diameter
3. Circular pitch
4. Working depth

7-31. What is the most important calculation in making a spur gear?

1. Pitch circle
2. Outside diameter
3. Diametral pitch
4. Chordal thickness

IN ANSWERING QUESTIONS 7-38 THROUGH 7-41, REFER TO THE GEAR IN FIGURE 7A.

7-38. The pitch diameter is indicated by what line?

1. A
2. B
3. C
4. D

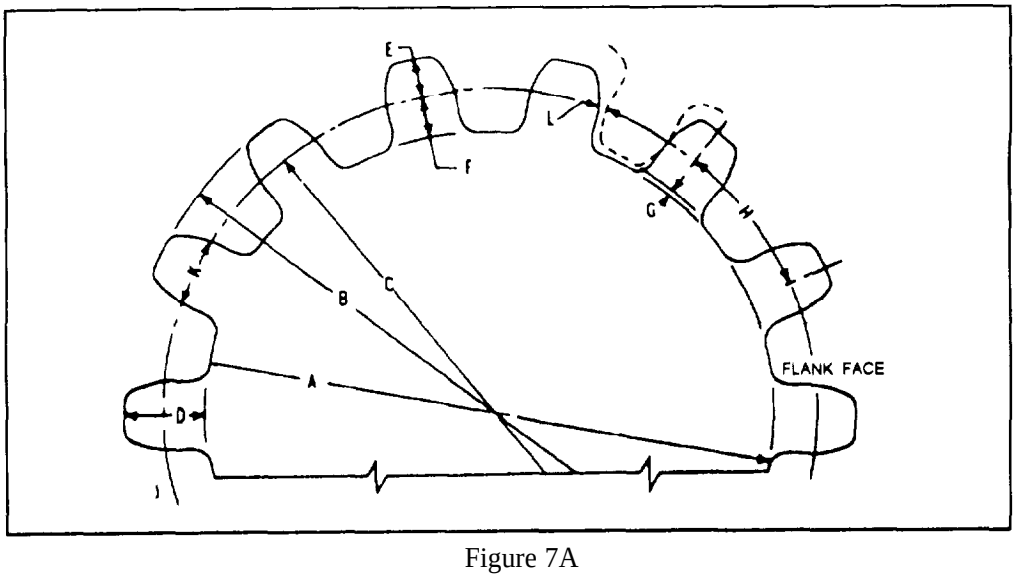

Figure 7A

7-39. The circular pitch is indicated by what letter?

1. E
2. H
3. J
4. K

7-40. The whole depth is indicated by what dimensions?

1. E + G
2. E + k
3. B - A
4. E - G

7-41. If B is 4 inches and D is 5/8 inch, what is the root diameter?

1. 2 3/4 in.
2. 3 in.
3. 3 1/4 in.
4. 3 1/2 in.

Questions 7-42 through 7-46 are based on an 8 DP, 32-tooth gear whose outside diameter is 4.250 inches.

7-42. What is the whole depth of tooth on this gear?

1. 0.2696
2. 0.4044
3. 0.4348
4. 0.5285

7-43. What number cutter should be used to cut this gear?

1. 7
2. 8
3. 3
4. 4

7-44. What is the addendum on this gear?

1. 0.0386 in.
2. 0.1250 in.
3. 0.1964 in.
4. 0.2696 in.

7-45. The stock you will use to make this gear should be what minimum diameter?

1. 4 1/8 in.
2. 4 1/4 in.
3. 4 3/8 in.
4. 4 1/2 in.

7-46. The gear tooth thickness should be checked with what gauge?

1. A micrometer
2. A gear tooth vernier caliper
3. An indexing gauge
4. A dial vernier caliper

7-47. The Rockwell hardness tester works on what principle?

1. Measuring indentation
2. Heat resistance
3. Flexibility of the metal being tested
4. Shear strength of the metal being tested

7-48. When testing softer metals with the Rockwell hardness tester, you should use what size penetrator?

1. 1/64 in.
2. 1/32 in.
3. 1/16 in.
4. 1/8 in.

7-49. When you use a Rockwell hardness tester to test a specimen of very soft steel, the specimen can be what minimum thickness?

1. 0.040 in.
2. 0.050 in.
3. 0.080 in.
4. 0.090 in.

7-50. What is the simplest method used to test a material's hardness?

1. Spark
2. Rockwell
3. Tukron
4. File

***U.S. GOVERNMENT PRINTING OFFICE: 1993—533-131/00034**

COURSE COMPLETION/DISENROLLMENT FORM
(Refer to instructions in front of course)

PLEASE PRINT CLEARLY

MACHINERY REPAIRMAN 3	72204
NONRESIDENT TRAINING COURSE (NRTC)	NAVEDTRA NUMBER

NAME, RANK, RATE, CIVILIAN	SSN

IF YOUR COURSE WAS ADMINISTERED BY NETPMSA, YOU MUST SUBMIT THIS FORM TO THE ADDRESS BELOW. IF YOUR COURSE WAS ADMINISTERED BY AN ACTIVE DUTY COMMAND OR NAVAL RESERVE CENTER, DO NOT SUBMIT THIS FORM TO NETPMSA.

☐ COURSE COMPLETION (Date_____)

YOU SHOULD RETAIN THE TRAINING MANUAL AND THE ASSIGNMENT BOOKLET IF THEY ARE NOT CLASSIFIED. If CLASSIFIED, submit the material to your command for proper disposition of CLASSIFIED material. A letter of satisfactory completion will be issued to you after your last assignment is received and processed. This form should be included when you send in the last assignment. If the training manual and NRTC courses are designated with distribution statements B, C, D, E, F, or X, and you decide to dispose of the material, you must destroy the material to prevent disclosure of contents or reconstruction of the document.

☐ DISENROLLMENT (Date_____)
(Did not complete the course)

In the event of disenrollment, submit this form to the address below with any unused ADP answer sheets. You need not return any other course material. If the course material is CLASSIFIED, you must submit the material to your command for proper disposition of CLASSIFIED material. If the training manual and NRTC courses are designated with distribution statements B, C, D, E, F, or X, and you decide to dispose of the material, you must destroy the material to prevent disclosure of contents or reconstruction of the document.

☐ OTHER REASON (Specify) :

PRIVACY ACT STATEMENT

Under authority of Title 5, USC 301, information regarding your military status is requested to assist in processing your comments and prepare a reply. This information will not be divulged, without written authorization, to anyone other than those within DOD for official use in determining performance.

COMMANDING OFFICER
NETPMSA CODE 074
6490 SAUFLEY FIELD RD
PENSACOLA FL 32559-5000

STUDENT COMMENT SHEET

THIS FORM MAY BE USED TO SUGGEST IMPROVEMENTS, REPORT COURSE ERRORS, OR TO REQUEST HELP IF YOU HAVE DIFFICULTY COMPLETING THE COURSE.

Date

FROM: _____ SSN

NAME (Last, first, M.I.)
RANK, RATE, CIVILIAN

_____

STREET ADDRESS, APT #

_____ ZIP CODE _____

CITY. STATE

To: COMMANDING OFFICER
NETPMSA CODE 0312
6490 SAUFLEY FIELD RD
PENSACOLA FL 32509-5237

Subj: MACHINERY REPAIRMAN 3, NAVEDTRA 72204

1. The following comments are hereby submitted:

PRIVACY ACT STATEMENT

Under authority of Title 5, USC 301, information regarding your military statusis requested to assist in processing your comments and prepare a reply. This information will not he divulged, without written authorization, to anyone other than those within DOD for official use in determining performance.

NETPMSA 1550/41 (Rev. 2-93)

. . . . . (Fold along dotted line and staple or tape. . . . . .

. . . . . (Fold along dotted line and staple or tape) . . . . . .

DEPARTMENT OF THE NAVY

COMMANDING OFFICER
NETPMSA CODE 0312
6490 SAUFLEY FIELD RD
PENSACOLA FL 32509-5237

OFFICIAL BUSINESS

COMMANDING OFFICER
NETPHSA CODE 0312
6490 SAUFLEY FIELD RD
PENSACOLA FL 32509-5237

Stock Ordering No. 0502-LP-216-0100

PRINT OR TYPE

TITLE _____ NAVEDTRA _____

NAME _____ ADDRESS _____
Last First Middle Street/Ship/Unit/Division, etc.

_____
City or FPO State Zip

RANK/RATE ____ SOC. SEC. NO. _____ DESIGNATOR _____ ASSIGNMENT NO. _____

☐ USN ☐ USNR ☐ ACTIVE ☐ INACTIVE OTHER (Specify) _____ DATE MAILED _____

SCORE

	1 T	2 F	3	4			1 T	2 F	3	4			1 T	2 F	3	4	
1	☐	☐	☐	☐		26	☐	☐	☐	☐		51	☐	☐	☐	☐	
2	☐	☐	☐	☐		27	☐	☐	☐	☐		52	☐	☐	☐	☐	
3	☐	☐	☐	☐		28	☐	☐	☐	☐		53	☐	☐	☐	☐	
4	☐	☐	☐	☐		29	☐	☐	☐	☐		54	☐	☐	☐	☐	
5	☐	☐	☐	☐		30	☐	☐	☐	☐		55	☐	☐	☐	☐	
6	☐	☐	☐	☐		31	☐	☐	☐	☐		56	☐	☐	☐	☐	
7	☐	☐	☐	☐		32	☐	☐	☐	☐		57	☐	☐	☐	☐	
8	☐	☐	☐	☐		33	☐	☐	☐	☐		58	☐	☐	☐	☐	
9	☐	☐	☐	☐		34	☐	☐	☐	☐		59	☐	☐	☐	☐	
10	☐	☐	☐	☐		35	☐	☐	☐	☐		60	☐	☐	☐	☐	
11	☐	☐	☐	☐		36	☐	☐	☐	☐		61	☐	☐	☐	☐	
12	☐	☐	☐	☐		37	☐	☐	☐	☐		62	☐	☐	☐	☐	
13	☐	☐	☐	☐		38	☐	☐	☐	☐		63	☐	☐	☐	☐	
14	☐	☐	☐	☐		39	☐	☐	☐	☐		64	☐	☐	☐	☐	
15	☐	☐	☐	☐		40	☐	☐	☐	☐		65	☐	☐	☐	☐	
16	☐	☐	☐	☐		41	☐	☐	☐	☐		66	☐	☐	☐	☐	
17	☐	☐	☐	☐		42	☐	☐	☐	☐		67	☐	☐	☐	☐	
18	☐	☐	☐	☐		43	☐	☐	☐	☐		68	☐	☐	☐	☐	
19	☐	☐	☐	☐		44	☐	☐	☐	☐		69	☐	☐	☐	☐	
20	☐	☐	☐	☐		45	☐	☐	☐	☐		70	☐	☐	☐	☐	
21	☐	☐	☐	☐		46	☐	☐	☐	☐		71	☐	☐	☐	☐	
22	☐	☐	☐	☐		47	☐	☐	☐	☐		72	☐	☐	☐	☐	
23	☐	☐	☐	☐		48	☐	☐	☐	☐		73	☐	☐	☐	☐	
24	☐	☐	☐	☐		49	☐	☐	☐	☐		74	☐	☐	☐	☐	
25	☐	☐	☐	☐		50	☐	☐	☐	☐		75	☐	☐	☐	☐	

THIS FORM MAY BE LOCALLY REPRODUCED