CHAPTER 3

ROOF CONSTRUCTION AND TRIM CARPENTRY

The previous chapters have dealt with framing wood structures, including joists, studs, rafters, and other structural members. These constitute "rough carpentry" and are the main supports of a wood-frame structure. (Subflooring and wall and roof sheathing strengthen and brace the frame.)

The remaining work on the structure involves installing the nonstructural members. This work, referred to as "finish carpentry," includes installing the roof covering, door and window frames, and the doors and windows themselves. Some nonstructural members are purely ornamental, such as casings on doors and windows, and the moldings on cornices and inside walls. Instillation of purely ornamental members is known as trim carpentry.

Finish carpentry is divided into exterior and interior finish. Exterior finish material consist of roof sheathing, exterior trim, roof coverings, outside wall covering, and exterior doors and windows. Exterior finish materials are installed after the rough carpentry has been completed. Examples of interior finish materials include all coverings applied to the rough walls, ceilings, and floors. We will cover these topics in a later chapter.

In this chapter, we'll cover the exterior finishing of roofs. In the next chapter, we'll examine the exterior finishing of walls.

ROOF SHEATHING

LEARNING OBJECTIVE: Upon completing this section, you should be able to identify various types of roof sheathing and describe their installation requirements.

Roof sheathing covers the rafters or roof joists. The roof sheathing is a structural element and, therefore, part of the framing. Sheathing provides a nailing base for the finish roof covering and gives rigidity and strength to the roof framing. Lumber and plywood roof sheathing are the most commonly used materials for pitched roofs. Plank or laminated roof decking is sometimes used in structures with exposed ceilings. Manufactured wood fiber roof decking is also adaptable to exposed ceiling applications.

LUMBER

Roof sheathing boards are generally No. 3 common or better. These are typically softwoods, such as Doughs fir, redwood, hemlock, western larch, fir, and spruce. If you're covering the roof with asphalt shingles, you should use only thoroughly seasoned wood for the sheating. Unseasoned wood will dry and shrink which may cause the shingles to buckle or lift along the full length of the sheathing board.

Nominal 1-inch boards are used for both flat and pitched roofs. Where flat roofs are to be used for a deck or a balcony, thicker sheathing boards are required. Board roof sheathing, like board wall sheathing and subflooring, can be laid either horizontally or diagonally. Horizontal board sheathing may be closed (laid with no space between the courses) or open (laid with space between the courses). In areas subject to wind-driven snow, a solid roof deck is recommended.

Installation

Roof boards used for sheathing under materials requiring solid, continuous support must be laid closed. This includes such applications as asphalt shingles, composition roofing, and sheet-metal roofing. Closed roof sheathing can also be used for wood shingles. The boards are nominal 1 inch by 8 inches and may be square-edged, dressed and matched, shiplapped, or tongue and groove. Figure 3-1 shows the installation of both closed and open lumber roof sheathing.

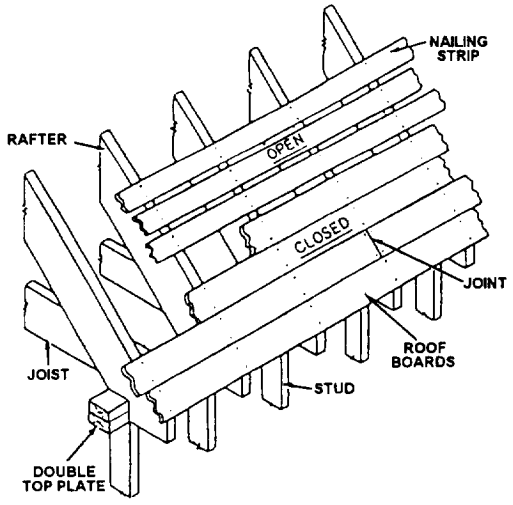

Figure 3-1.-Closed and open roof sheathing.

Open sheathing can be used under wood shingles or shakes in blizzard-free areas or damp climates. Open sheathing usually consists of 1- by 4-inch strips with the on-center (OC) spacing equal to the shingle weather exposure, but not over 10 inches. (A 10-inch shingle lapped 4 inches by the shingle above it is said to be laid 6 inches to the weather.) When applying open sheathing, you should lay the boards without spacing to a point on the roof above the overhang.

Nailing

Nail lumber roof sheathing to each rafter with two 8-penny (8d) nails. Joints must be made on the rafters just as wall sheathing joints must be made over the studs. When tongue-and-groove boards are used, joints may be made between rafters. In no case, however, should the joints of adjoining boards be made over the same rafter space. Also, each board should bear on at least two rafters.

PLYWOOD

Plywood offers design flexibility, construction ease, economy, and durability. It can be installed quickly over large areas and provides a smooth, solid base with a minimum number of joints. A plywood deck is equally effective under any type of shingle or built-up roof. Waste is minimal, contributing to the low in-place cost.

Plywood is one of the most common roof sheathing materials in use today. It comes in 4- by 8-foot sheets in a variety of thicknesses, grades, and qualities. For sheathing work a lower grade called CDX is usually used. A large area (32 square feet) can be applied atone time. This, plus its great strength relative to other sheathing materials, makes plywood a highly desirable choice.

The thickness of plywood used for roof sheathing is determined by several factors. The distance between rafters (spacing) is one of the most important. The larger the spacing, the greater the thickness of sheathing that should be used. When 16-inch OC rafter spacing is used, the minimum recommended thickness is 3/8 inch. The type of roofing material to be applied over the sheathing also plays a role. The heavier the roof covering, the thicker the sheathing required. Another factor determining sheathing thickness is the prevailing weather. In areas where there are heavy ice and snow loads, thicker sheathing is required. Finally, you have to consider allowable dead and live roof loads established by calculations and tests.

These are the controlling factors in the choice of roof sheathing materials. Recommended spans and plywood grades are shown in table 3-1.

Installation

Plywood sheathing is applied after rafters, collar ties, gable studs, and extra bracing (if necessary) are in place. Make sure there are no problems with the roof frame. Check rafters for plumb, make sure there are no badly deformed rafters, and check the tail cuts of all the rafters for alignment. The crowns on all the rafters should be in one direction—up.

Figure 3-2 shows two common methods of starting the application of sheathing at the roof eaves. In view A, the sheathing is started flush with the tail cut of the rafters. Notice that when the fascia is placed, the top edge of the fascia is even with the top of the sheathing. In view B, the sheathing overlaps the tail end of the rafter by the thickness of the fascia material. You can see that the edge of the sheathing is flush with the fascia.

If you choose to use the first method (view A) to start the sheathing, measure the two end rafters the width of the plywood panel (48 inches). From the rafter tail ends, and using the chalk box, strike a line on the top edge of all the rafters. If you use the second method,

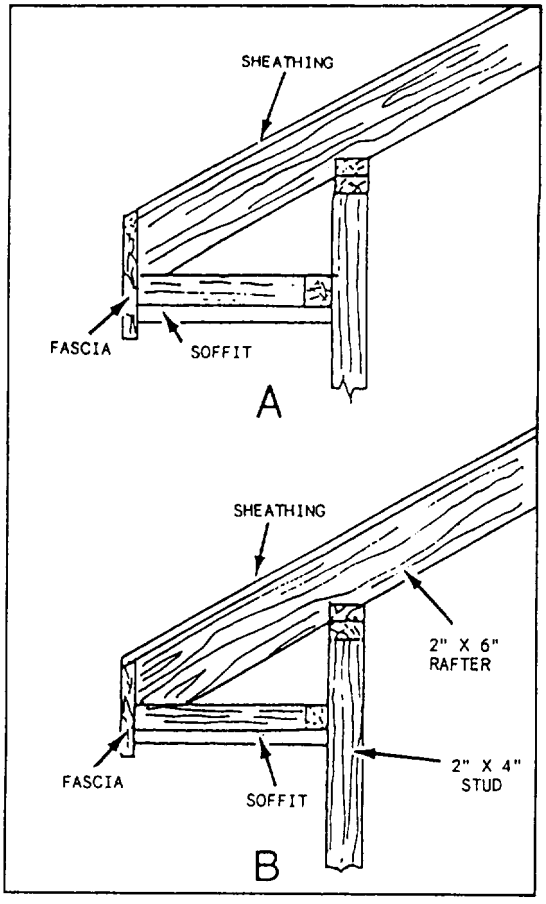

Figure 32.—Two methods of starting the first sheet of roof sheathing at the eaves of a roof: A. Flush with rafter; B. Overlapping rafter.

Table 3-1.-Plywood Roof Sheathing Application Specifications

Plywood roof sheathing [1, 2, 3] (Plywood continuous over two or more spans; grain of face plies across supports)

PANEL IDENTIFICATION INDEX	PLYWOOD THICKNESS (inch)	MAX. SPAN (inches)[4]	UNSUPPORTED EDGE-MAX. LENGTH (inches)[5]	ALLOWABLE ROOF LOADS (psf)[6, 7]										
				Spacing of Supports (inches center to center)										
				12	16	20	24	30	32	36	42	48	60	72
12/0	5/16	12	12	100 (130)										
16/0	5/16, 3/8	16	16	130 (170)	55 (75)									
20/0	5/16, 3/8	20	20		85 (110)	45 (55)								
24/0	3/8, 1/2	24	24		150 (160)	75 (100)	45 (60)							
30/12	5/8	30	26			145 (165)	85 (110)	40 (55)						
32/16	1/2, 5/8	32	28				90 (105)	45 (60)	40 (50)					
36/16	3/4	36	30				125 (145)	65 (85)	55 (70)	35 (50)				
42/20	5/8, 3/4 7/8	42	32					80 (105)	65 (90)	45 (60)	(35) (40)			
48/24	3/4, 7/8	48	36						105 (115)	75 (90)	55 (55)	40 (40)		
2-4-1	1 1/8	72	48							175 (175)	105 (105)	80 (80)	50 (50)	30 (35)
1 1/8 G1&2	1 1/8	72	48							145 (145)	85 (85)	65 (65)	40 (40)	30 (30)
1 1/4 G3&4	1 1/4	72	48							160 (165)	95 (95)	75 (75)	45 (45)	25 (35)

Notes:

1. Applies to Standard, Structural I and II and C-C grades only
2. For applications where the roofing is to be guaranteed by a performance bond, recommendations may differ somewhat from these values. Contact American Plywood Association for bonded roof recommendations
3. Use 6d common smooth, ring-shank or spiral thread nails for plywood 1/2" thick or less, and 8d common smooth, ring-shank or spiral thread for panels over 1/2" but not exceeding 1" thick (if ring-shank or spiral thread nails same diameter as common). Use 8d ring-shank or spiral thread or 10d common smooth shank nails for 2-4-1, 1 1/8" and 1 1/4" panels. Space nails 6" at panel edges and 12" at intermediate supports except those where spans are 48" or more, nails must be 6" at all supports
4. These spans must not be exceeded for any load conditions
5. Provide adequate blocking, tongue-and-groove edges or other suitable edge support, such as ply clips when spans exceed indicated value. Use two ply clips for 48" or greater spans and one for lesser spans
6. Uniform load deflection limitation: 1/180th of the span under live load plus dead load. 1/240th under live load only. In the table, allowable live load is shown above with allowable total load shown below in parentheses
7. Allowable roof loads were established by laboratory tests and calculations assuming evenly distributed loads

measure the width of the panel minus the actual thickness of the fascia material. Use this chalk line to position the upper edge of the sheathing panels. If the roof rafters are at right angles to the ridge and plates, this line will place the sheathing panels parallel to the outer ends of the rafters.

WARNING

Be particularly careful when handling sheet material on a roof during windy conditions. You may be thrown off balance and possibly off the roof entirely. Also, the sheet may be blown off the roof and strike someone.

Placing

Notice in figure 3-2 that sheathing is placed before the trim is applied. Sheathing is always placed from the lower (eaves) edge of the roof up toward the ridge. It can be started from the left side and worked toward the right, or you can start from the right and work toward the left. Usually, it is started at the same end of the house from which the rafters were laid out.

The first sheet of plywood is a full 4- by 8-foot panel. The top edge is placed on the chalk line. If the sheathing is started from the left side of the roof, make sure the right end falls in the middle of a rafter. This must be done so that the left end of the next sheet has a surface upon which it can bear weight and be nailed.

The plywood is placed so that the grain of the top ply is at right angles (perpendicular) to the rafters. Placing the sheathing in this fashion spans a greater number of rafters, spreads the load, and increases the strength of the roof. Figure 3-3 shows plywood panels laid perpendicular to the rafters with staggered joints. Note that a small space is left between sheets to allow for expansion.

The sheets that follow are butted against spacers until the opposite end is reached. If there is any panel hanging over the edge, it is trimmed after the panel is fastened in place. A chalk line is snapped on the sheathing flush with the end of the house, and the panel is then cut with a circular saw. Read the manufacturer's specification stamp and allow proper spacing at the ends and edges of the sheathing. This will compensate for any swelling that might take place with changes in moisture content.

The cutoff piece of sheathing can be used to start the second course (row of sheathing), provided it spans two or more rafters. If it doesn't span two rafters, start the second course with a half sheet (4 by 4) of plywood.

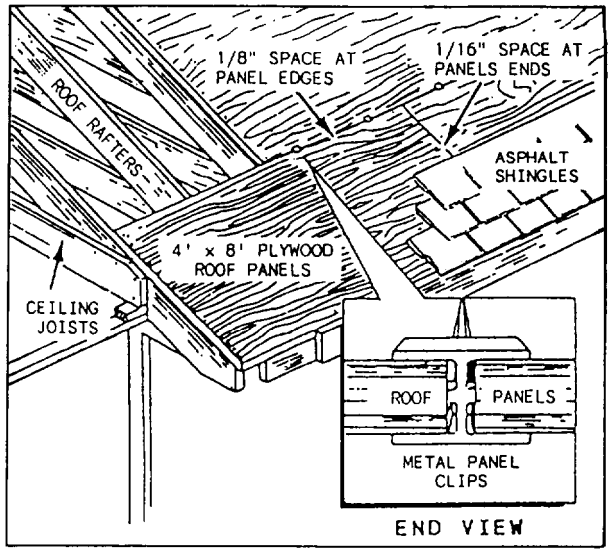

Figure 3-3.-Plywood roofing panel installation.

It is important to stagger all vertical joints. All horizontal joints need blocking placed underneath or a metal clip (ply clip). Ply clips (H clips or panel clips) are designed to strengthen the edges of sheathing panels between supports or rafters. The use of clips is determined by the rafter spacing and specifications (see figure 3-3).

The pattern is carried to the ridge. The final course is fastened in place, a chalk line is snapped at the top edge of the rafters, and the extra material cut off. The opposite side of the roof is then sheeted using the same pattern.

Nailing

When nailing plywood sheathing, follow the project specifications for nailing procedures. Use 6d common smooth, ring-shank or spiral thread nails for plywood 1/2 inch thick or less. For plywood more than 1/2 inch but not exceeding 1 inch thick, use 8d common smooth, ring-shank or spiral thread nails. When using a nail gun for roof sheathing, follow all applicable safety regulations.

ROOF DECKING

In this section, we'll discuss the two most common types of roof decking you will encounter as a Builder: plank and wood fiber.

Plank

Plank roof decking, consisting of 2-inch (and thicker) tongue-and-groove planking, is commonly

used for flat or low-pitched roofs in post-and-beam construction. Single tongue-and-groove decking in nominal 2 by 6 and 2 by 8 sizes is available with the V-joint pattern only.

Decking comes in nominal widths of 4 to 12 inches and in nominal thicknesses of *2* to *4* inches. Three- and 4-inch roof decking is available in random lengths of 6 to 20 feet or longer (odd and even).

Laminated decking is also available in several different species of softwood lumber: Idaho white pine, inland red cedar, Idaho white fir, ponderosa pine, Douglas fir, larch, and yellow pine. Because of the laminating feature, this material may have a facing of one wood species and back and interior laminations of different woods. It is also available with all laminations of the same species. For all types of decking, make sure the material is the correct thickness for the span by checking the manufacturer's recommendations. Special load requirements may reduce the allowable spans. Roof decking can serve both as an interior ceiling finish and as a base for roofing. Heat loss is greatly reduced by adding fiberboard or other rigid insulation over the wood decking.

INSTALLATION.— Roof decking applied to a flat roof should be installed with the tongue away from the worker. Roof decking applied to a sloping roof should be installed with the tongue up. The butt ends of the pieces are bevel cut at approximately a 2° angle (fig. 3-4). This provides a bevel cut from the face to the back to ensure a tight face butt joint when the decking is laid in a random-length pattern. If there are three or more supports for the decking, a controlled random laying pattern (shown in figure 3-5) can be used. This is an economical pattern because it makes use of random-plank lengths, but the following rules must be observed:

- Stagger the end joints in adjacent planks as widely as possible and not less than 2 feet.
- Separate the joints in the same general line by at least two courses.
- Minimize joints in the middle one-third of all spans.
- Make each plank bear on at least one support.
- Minimize the joints in the end span.

The ability of the decking to support specific loads depends on the support spacing, plank thickness, and span arrangement. Although two-span continuous layout offers structural efficiency, use of random-length

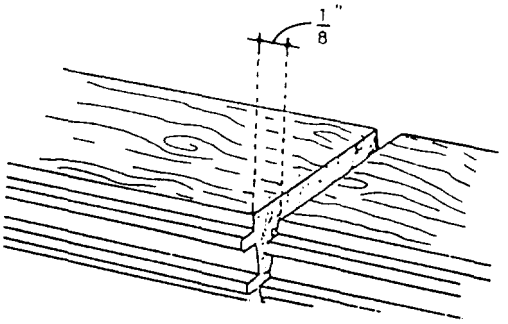

Figure 3-4.-Ends of roof decking cut at a 2° angle.

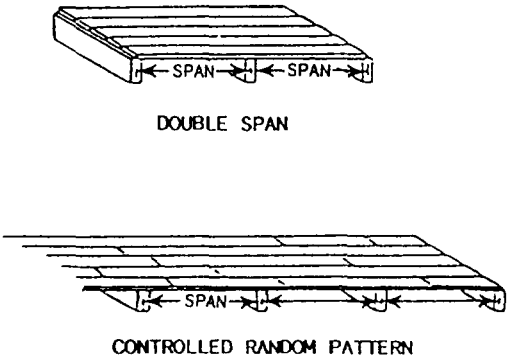

Figure 3-5.-Plank decking span arrangements.

planks is the most economical. Random-length double tongue-and-groove decking is used when there are three or more spans. It is not intended for use over single spans, and it is not recommended for use over double spans (see figure 3-5).

NAILING.— Fasten decking with common nails twice as long as the nominal plank thickness. For widths 6 inches or less, toenail once and face-nail once at each support. For widths over 6 inches, toenail once and face-nail twice. Decking 3 and 4 inches thick must be predrilled and toenailed with 8-inch spikes. Bright common nails may be used, but dipped galvanized common nails have better holding power and reduce the possibility of rust streaks. End joints not over a support should be side-nailed within 10 inches of each plank end. Splines are recommended on end joints of 3- and 4-inch material for better alignment, appearance, and strength.

Wood Fiber

All-wood fiber roof decking combines strength and insulation advantages that make possible quality construction with economy. This type of decking is weather resistant and protected against termites and rot.

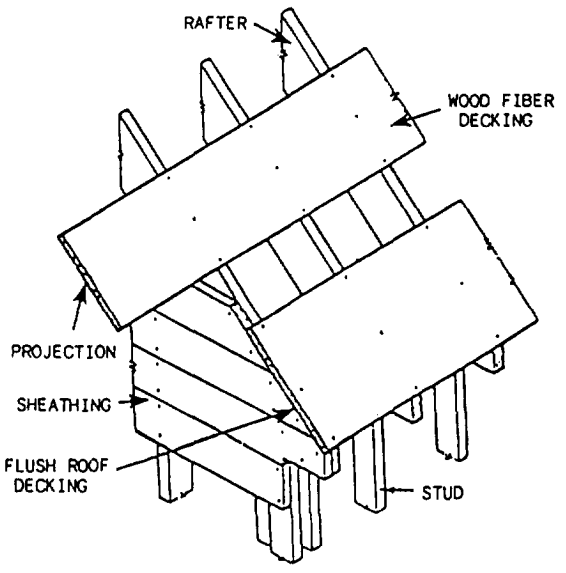

Figure 3-6.-Wood fiber roof decking at gable ends.

It is ideally suited for built-up roofing, as well as for asphalt and wood shingles on all types of buildings. Wood fiber decking is available in four thicknesses: 2 3/8 inches, 1 7/8 inches, 1 3/8 inches, and 15/16 inch. The standard panels are 2 inches by 8 feet with tongue-and-groove edges and square ends. The surfaces are coated on one or both sides at the factory in a variety of colors.

INSTALLATION.—Wood fiber roof decking is laid with the tongue-and-groove joint at right angles to the support members. The decking is started at the cave line with the groove edge opposite the applicator. Staple wax paper in position over the rafter before installing the roof deck. The wax paper protects the exposed interior finish of the decking if the beams are to be stained. Caulk the end joints with a nonstaining caulking compound. Butt the adjacent piece up against the caulked joint. Drive the tongue-and-groove edges of each unit firmly together with a wood block cut to fit the grooved edge of the decking. End joints must be made over a support member.

NAILING.— Although the wood fiber roof panels have tongue-and-groove edges, they are nailed through the face into the wood, rafters, or trusses. Face-nail 6 inches OC with 6d nails for 15/16-inch, 8d for 1 3/8-inch, 10d for 1 7/8-inch, and 16d for 2 3/8-inch thicknesses.

If you aren't going to apply the finish rooting material immediately after the roof is sheeted, cover the deck with building felt paper. The paper will protect the sheathing in case of rain. Wet panels tend to separate.

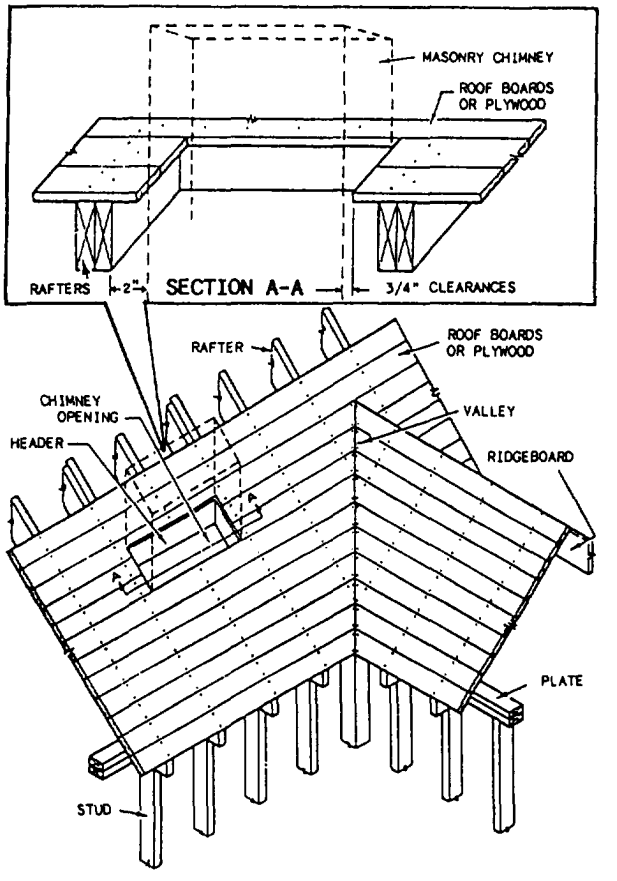

Figure 3-7.-Sheathing details at chimney and valley openings.

Roof decking that extends beyond gable-end walls for the overhang should span not less than three rafter spaces. This is to ensure anchorage to the railers and to prevent sagging (see figure 3-6). When the projection is greater than 16 to 20 inches, special ladder framing is used to support the sheathing.

Table 3-2.-Determining Roof Area from a Plan

RISE (Inches)	FACTOR	RISE	FACTOR
3"	1.031	8"	1.202
3 1/2"	1.042	8 1/2"	1.225
4"	1.054	9"	1.250
4 1/2"	1.068	9 1/2"	1.275
5"	1.083	10"	1.302
5 1/2"	1.100	10 1/2"	1.329
6"	1.118	11"	1.357
6 1/2"	1.137	11 1/2"	1.385
7"	1.158	12"	1.414
7 1/2"	1.179		

Table 3-3.-Lumber Sheathing Specifications and Estimating Factor

	NOMINAL SIZE	WIDTH		AREA FACTOR
		Dress	Face	
Shiplap	1 × 6	5 7/16	4 15/16	1.22
	1 × 8	7 1/8	6 5/8	1.21
	1 × 10	9 1/8	8 5/8	1.16
	1 × 12	11 1/8	10 5/8	1.13
Tongue and Groove	1 × 4	3 7/16	3 3/16	1.26
	1 × 6	5 7/16	5 3/16	1.16
	1 × 8	7 1/8	6 7/8	1.16
	1 × 10	9 1/8	8 7/8	1.13
	1 × 12	11 1/8	10 7/8	1.10
S4S	1 × 4	3 1/2	3 1/2	1.14
	1 × 6	5 1/2	5 1/2	1.09
	1 × 8	7 1/4	7 1/4	1.10
	1 × 10	9 1/4	9 1/4	1.08
	1 × 12	11 1/4	11 1/4	1.07

Plywood extension beyond the end wall is usually governed by the rafter spacing to minimize waste. Thus, a 16-inch rake (gable) projection is commonly used when rafters are spaced 16 inches OC. Butt joints of the plywood sheets should be alternated so they do not occur on the same rafter.

DETAILS AT CHIMNEY AND VALLEY OPENINGS

Where chimney openings occur in the roof structure, the roof sheathing should have a 3/4-inch clearance on all sides from the finished masonry. Figure 3-7 shows sheathing details at the valley and chimney opening. The detail at the top shows the clearances between masonry and wood-framing members. Framing members should have a 2-inch clearance for fire protection. The sheathing should be securely nailed to the rafters and to the headers around the opening.

Wood or plywood sheathing at the valleys and hips should be installed to provide a tight joint and should be securely nailed to hip and valley rafters. This provides a smooth solid base for metal flashing.

ESTIMATING SHEATHING MATERIAL

To figure the roof area without actually getting on the roof and measuring, find the dimensions of the roof on the plans. Multiply the length times the width of the roof, including the overhang. Then multiply by the factor shown opposite the rise of the roof in table 3-2. The result will be the roof area.

For example, assume a building is 70 feet long and 30 feet wide (including the overhang), and the roof has a rise of 5 1/2 inches: 70 feet x 30 feet = 2,100 square feet. For arise of 5 1/2 inches, the factor on the chart is 1.100:2,100 square feet x 1.100=2,310 square feet. So, the total area to be covered is 2,310 square feet. Use this total area for figuring roofing needs, such as sheathing, felt underpayment, or shingles.

Lumber Sheathing

To decide how much lumber will be needed, first calculate the total area to be covered. Determine the size boards to be used, then refer to table 3-3. Multiply the total area to be covered by the factor from the chart. For example, if 1- by 8-inch tongue-and-groove sheathing

Table 3-4.-Plank Decking Estimating Factor

SIZE	AREA FACTOR
2" × 6"	2.40
2" × 8"	2.29
3" × 6"	3.43
4" × 6"	4.57

boards are to be used, multiply the total roof area by 1.16. To determine the total number of board feet needed, add 5 percent for trim and waste.

Plywood Sheathing

To determine how much plywood will be needed, find the total roof area to be covered and divide by 32 (the number of square feet in one 4-by 8-foot sheet of plywood). This gives you the number of sheets required to cover the area. Be sure to add 5 percent for a trim and waste allowance.

Decking or Planking

To estimate plank decking, first determine the area to be covered, then refer to the chart in table 3-4. In the left column, find the size planking to be applied. For example, if 2- by 6-inch material is selected, the factor is 2.40. Multiply the area to be covered by this factor and add a 5 percent trim and waste allowance.

Wood Fiber Roof Decking

To estimate the amount of weed fiber decking required, first find the total roof area to be covered. For every 100 square feet of area, you will need 6.25 panels, 2 by 8 feet in size. So, divide the roof area by 100 and multiply by 6.25. Using our previous example with a roof area of 2,310 square feet, you will need 145 panels.

EXTERIOR TRIM

LEARNING OBJECTIVE: Upon completing this section, you should be able to identify the types of cornices and material used in their construction.

Exterior trim includes door and window trim, cornice trim, facia boards and soffits, and rake or gable-end trim. Contemporary designs with simple cornices and moldings contain little of this material; traditional designs have considerable y more. Much of the exterior trim, in the form of finish lumber and moldings, is cut and fitted on the job. Other materials or assemblies, such as shutters, louvers, railings, and posts, are shop fabricated and arrive on the job ready to be fastened in place.

The properties desired in materials used for exterior trim are good painting and weathering characteristics, easy working qualities, and maximum freedom from warp. Decay resistance is desirable where materials may absorb moisture. Heartwood from cedar, cypress, and redwood has high decay resistance. Less durable species can be treated to make them decay resistant. Many manufacturers pre-dip materials, such as siding, window sash, door and window frames, and trim, with a water-repellent preservative. On-the-job dipping of end joints or miters cut at the building site is recommended when resistance to water entry and increased protection are desired.

Rust-resistant trim fastenings, whether nails or screws, are preferred wherever they may be in contact with weather. These include galvanized, stainless steel, or aluminum fastenings. When a natural finish is used, nails should be stainless steel or aluminum to prevent staining and discoloration. Cement-coated nails are not rust-resistant.

Siding and trim are normally fastened in place with a standard siding nail, which has a small flathead. However, finish or casing nails might also be used for some purposes. Most of the trim along the shingle line, such as at gable ends and cornices, is installed before the roof shingles are applied.

The roof overhangs (eaves) are the portions of the roof that project past the sidewalls of the building. The cornice is the area beneath the overhangs. The upward slopes of the gable ends are called rakes. Several basic designs are used for finishing off the roof overhangs and cornices. Most of these designs come under the category of open cornice or closed cornice. They not only add to the attractiveness of a building but also help protect the sidewalls of the building from rain and snow. Wide overhangs also shade windows from the hot summer sun.

Cornice work includes the installation of the lookout ledger, lookouts, plancier (soffit), ventilation screens, fascia, frieze, and the moldings at and below the eaves, and along the sloping sides of the gable end (rake). The ornamental parts of a cornice are called cornice trim and consist mainly of molding; the molding running up the side of the rakes of a gable roof is called gable cornice trim. Besides the main roof, the additions and dormers may have cornices and cornice trim.

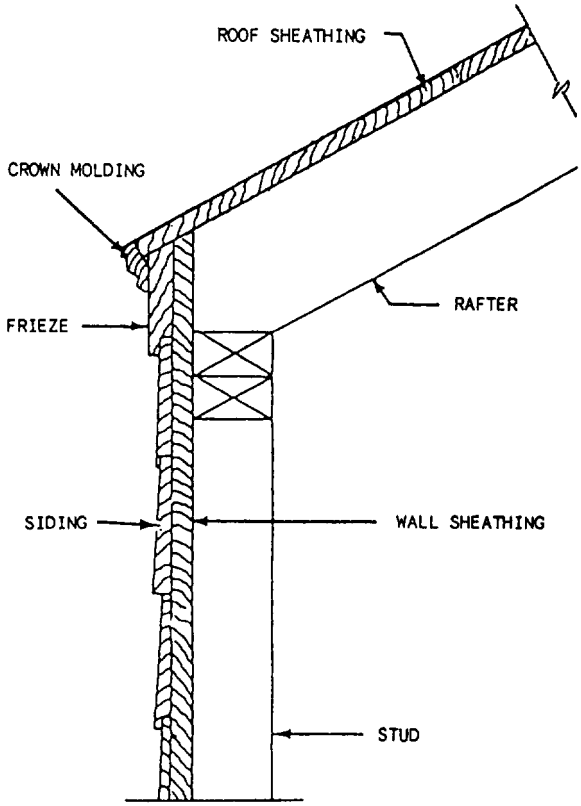

Figure 3-8.-Simple cornice.

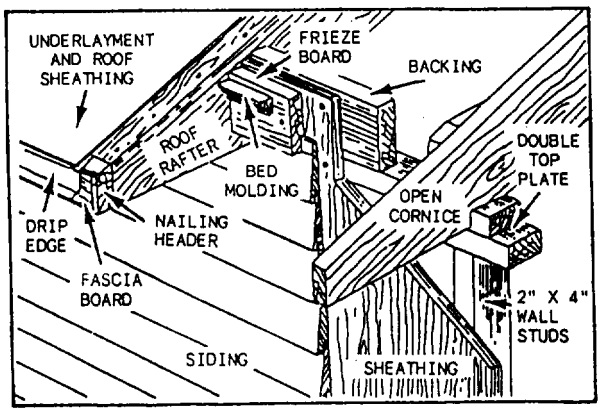

Figure 3-9.-Open cornice.

CORNICES

The type of cornice required for a particular structure is indicated on the wall sections of the drawings, and there are usually cornice detail drawings as well. A roof with no rafter overhang or cave usually has the simple cornice shown in figure 3-8. This cornice consists of a single strip or board called a frieze. It is beveled on the upper edge to fit under the overhang or cave and rabbeted on the lower edge to overlap the upper edge of the top course of siding. If trim is used, it usually consists of molding placed as shown in figure 3-8. Molding trim in this position is called crown molding.

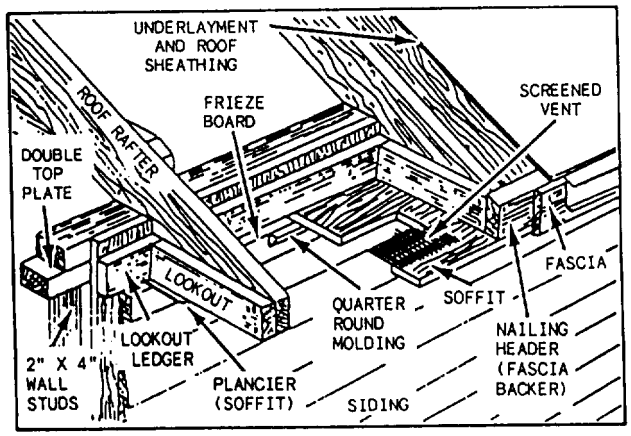

A

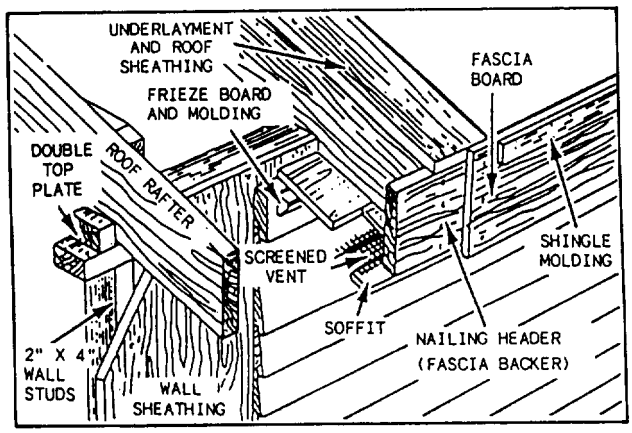

B

Figure 3-10.-Closed cornices: A. Flat boxed cornice; B. Sloped boxed cornice.

A roof with a rafter overhang may have an open cornice or a closed (also called a box) cornice. In open-cornice construction (fig. 3-9), the undersides of the rafters and roof sheathing are exposed. A nailing header (fascia backer) is nailed to the tail ends of the rafters to provide a straight and solid nailing base for the fascia board. Most spaces between the rafters are blocked off. Some spaces are left open (and screened) to allow attic ventilation. Usually, a frieze board is nailed to the wall below the rafters. Sometimes the frieze board is notched between the rafters and molding is nailed over it. Molding trim in this position is called bed molding. In closed-cornice construction, the bottom of the roof overhang is closed off. The two most common types of closed cornices are the flat boxed cornice and the sloped boxed cornice (shown in figure 3-10, views A and B, respectively).

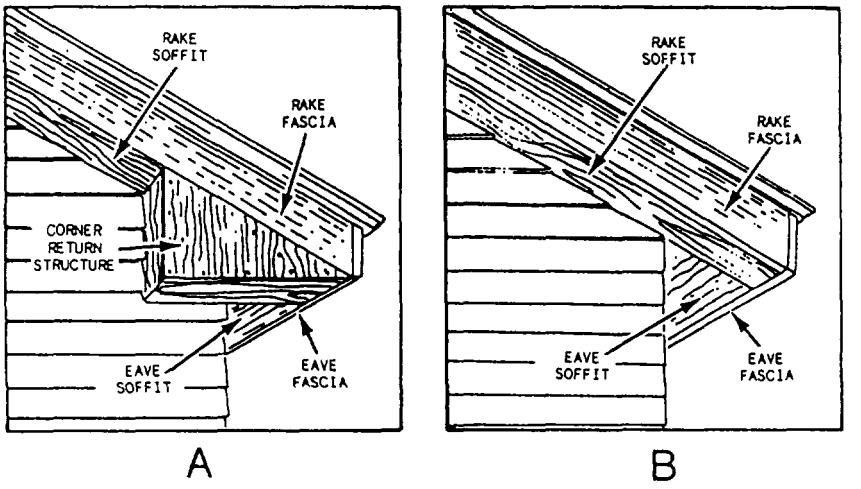

Figure 3-11.-Cornice construction: A. Finish rake for boxed cornice; B. Rake soffit of a sloped box cornice.

The flat boxed cornice requires framing pieces called lookouts. These are toenailed to the wall or to a lookout ledger and face-nailed to the ends of the rafters. The lookouts provide a nailing base for the soffit, which is the material fastened to the underside of the cornice. A typical flat boxed cornice is shown in figure 3-10, view A. For a sloped boxed cornice, the soffit material is nailed directly to the underside of the rafters (fig. 3-10, view B). This design is often used on buildings with wide overhangs.

The basic rake trim pieces are the frieze board, trim molding, and the fascia and soffit material. Figure 3-11, view A, shows the finish rake for a flat boxed cornice. It requires a cornice return where the cave and rake soffits join. View B shows the rake of a sloped boxed cornice. Always use rust-resistant nails for exterior finish work. hey may be aluminum, galvanized, or cadmium-plated steel.

PREFABRICATED WOOD AND METAL TRIM

Because cornice construction is time-consuming, various prefabricated systems are available that provide a neat, trim appearance. Cornice soffit panel materials include plywood, hardboard, fiberboard, and metal. Many of these are factory-primed and available in a variety of standard widths (12 to 48 inches) and in lengths up to 12 feet. They also maybe equipped with factory-installed screen vents.

When installing large sections of wood fiber panels, you should fit each panel with clearance for expansion. Nail 4d rust-resistant nails 6 inches apart along the edges and intermediate supports (lookouts). Strut nailing at the end butted against a previously placed panel. First, nail the panel to the main supports and then along the edges. Drive nails carefully so the underside of the head is just flush with the panel surface. Remember, this is finish work; no hammer head marks please. Always read and follow manufacturer's directions and recommended installation procedures. Cornice trim and soffit systems are also available in aluminum and come in a variety of prefinished colors and designs.

Soffit systems made of prefinished metal panels and attachment strips are common. They consist of three basic components wall hanger strips (also called frieze strips); soffit panels (solid, vented, or combination); and fascia covers. Figure 3-12 shows the typical installation configuration of the components. Soffit panels include a vented area and are available in a variety of lengths.

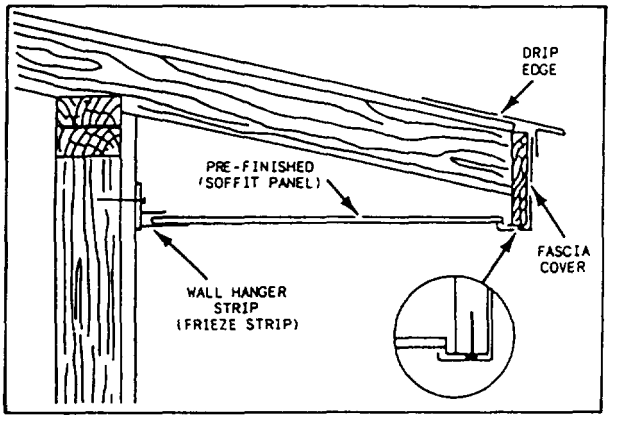

Figure 3-12.-Basic components of prefinished metal soffit system.

To install a metal panel system, first snap a chalk line on the sidewall level with the bottom edge of the fascia board. Use this line as a guide for nailing the wall hanger strip in place. Insert the panels, one at a time, into the wall strip. Nail the outer end to the bottom edge of the fascia board.

After all soffit panels are in place, cut the fascia cover to length and install it. The bottom edge of the cover is hooked over the end of the soffit panels. It is then nailed in place through prepunched slots located along the top edge. Remember to use nails compatible with the type of material being used to avoid electrolysis between dissimilar metals. Again, always study and follow the manufacturer's directions when making an installation of this type.

ROOFING TERMS AND MATERIALS

LEARNING OBJECTIVE: Upon completing this section, you should be able to define roofing terms and identify roofing materials.

The roof covering, or roofing, is a part of the exterior finish. It should provide long-lived waterproof protection for the building and its contents from rain, snow, wind, and, to some extent, heat and cold.

Before we begin our discussion of roof coverings, let's first look at some of the mast common terms used in roof construction.

TERMINOLOGY

Correct use of roofing terms is not only the mark of a good worker, but also a necessity for good construction. This section covers some of the more common roofing terms you need to know.

Square

Roofing is estimated and sold by the square. A square of roofing is the amount required to cover 100 square feet of the roof surface.

Coverage

Coverage is the amount of weather protection provided by the overlapping of shingles. Depending on the kind of shingle and method of application, shingles may furnish one (single coverage), two (double coverage), or three (triple coverage) thicknesses of material over the roof surface. Shingles providing single coverage are suitable for re-roofing over existing roofs. Shingles providing double and triple coverage are used for new construction. Multiple coverage increases weather resistance and provides a longer service life.

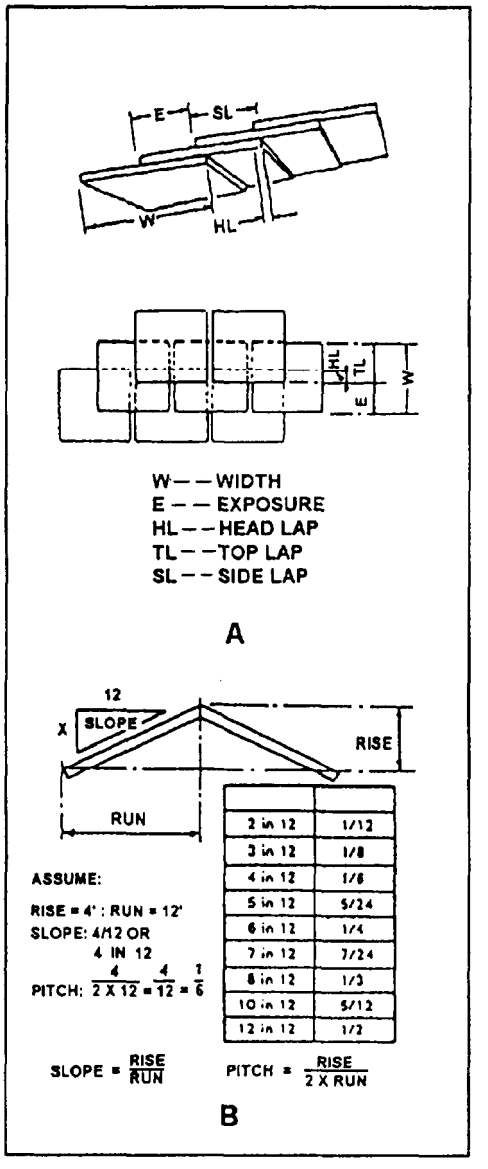

Figure 3-13.-Roofing terminology: A. Surfaces; B. Slope and pitch.

Shingle Surfaces

The various surfaces of a shingle are shown in view A of figure 3-13. "Shingle width" refers to the total measurement across the top of either a strip type or individual type of shingle. The area that one shingle overlaps a shingle in the course (row) below it is referred to as "top lap." "Side lap" is the area that one shingle

overlaps a shingle next to it in the same course. The area that one shingle overlaps a shingle two courses below it is known as head lap. Head lap is measured from the bottom edge of an overlapping shingle to the nearest top edge of an overlapped shingle. "Exposure" is the area that is exposed (not overlapped) in a shingle. For the best protection against leakage, shingles (or shakes) should be applied only on roofs with a unit rise of 4 inches or more. A lesser slope creates slower water runoff, which increases the possibility of leakage as a result of windblown rain or snow being driven underneath the butt ends of the shingles.

Slope

"Slope" and "pitch" are often incorrectly used synonymously when referring to the incline of a sloped roof. View B of figure 3-13 shows some common roof slopes with their corresponding roof pitches.

"Slope" refers to the incline of a roof as a ratio of vertical rise to horizontal run. It is expressed sometimes as a fraction but typically as X-in-12; for example, a 4-in-12 slope for a roof that rises at the rate of 4 inches for each foot (12 inches) of run. The triangular symbol above the roof in figure 3-13, view B, conveys this information.

Pitch

"Pitch" is the incline of a roof as a ratio of the vertical rise to twice the horizontal run. It is expressed as a fraction. For example, if the rise of a roof is 4 feet and the run 12 feet, the roof is designated as having a pitch of 1/6 (4/24= 1/6).

MATERIALS

In completing roofing projects, you will be working with a number of different materials. In the following section, we will discuss the most common types of underlayments, flashing, roofing cements, and exterior materials you will encounter. We will also talk about built-up roofing.

Materials used for pitched roofs include shingles of asphalt, fiberglass, and wood. Shingles add color, texture, and pattern to the roof surface. To shed water, all shingles are applied to roof surfaces in some overlapping fashion. They are suitable for any roof with enough slope to ensure good drainage. Tile and date are also popular. Sheet materials, such as roll roofing, galvanized steel, aluminum, copper, and tin, are sometimes used. For flat or low-pitched roofs, composition or built-up roofing with a gravel topping or cap sheet are frequent combinations. Built-up roofing consists of a number of layers of asphalt-saturated felt mopped down with hot asphalt or tar. Metal roofs are sometimes used on flat decks of dormers, porches, or entryways.

The choice of materials and the method of application are influenced by cost, roof slope, expected service life of the roofing, wind resistance, fire resistance, and local climate. Because of the large amount of exposed surface of pitched roofs, appearance is also important.

Underlayments

There are basically four types of underlayments you will be working with as a Builder: asphalt felt, organic, glass fiber, and tarred.

Once the roof sheathing is in place, it is covered with an asphalt felt underpayment commonly called roofing felt. Roofing felt is asphalt-saturated and serves three basic purposes. First, it keeps the roof sheathing dry until the shingles can be applied. Second, after the shingles have been laid, it acts as a secondary barrier against wind-driven rain and snow. Finally, it also protects the shingles from any resinous materials, which could be released from the sheathing.

Roofing felt is designated by the weight per square. As we mentioned earlier, a square is equal to 100 square feet and is the common unit to describe the amount of roofing material. Roofing felt is commonly available in rolls of 15 and 30 pounds per square. The rolls are usually 36 inches wide. A roll of 15-pound felt is 144 feet long, whereas a roll of 30-pound felt is 72 feet long. After you allow for a 2-inch top lap, a roll of 15-pound felt will cover 4 squares; a roll of 30-pound felt will cover 2 squares.

Underpayment should be a material with low vapor resistance, such as asphalt-saturated felt. Do not use materials, such as coated felts or laminated waterproof papers, which act as a vapor barrier. These allow moisture or frost to accumulate between the underlayment and the roof sheathing. Underlayment requirements for different kinds of shingles and various roof slopes are shown in table 3-5.

Apply the underpayment as soon as the roof sheathing has been completed. For single underpayment, start at the cave line with the 15-pound felt. Roll across

Table 3-5.-Underlayment Recommendations for Shingle Roofs

TYPE OF ROOFING	SHEATHING	TYPE OF UNDERLAYMENT	NORMAL SLOPE		LOW SLOPE	
Asbestos-Cement Shingles	Solid	No. 15 asphalt saturated asbestos (inorganic) felt, OR No. 30 asphalt saturated felt	5/12 and up	Single layer over entire roof	3/12 to 5/12	Double layer over entire roof[1]
Asphalt/Fiberglass Shingles	Solid	No. 15 asphalt saturated felt	4/12 and up	Single layer over entire roof	2/12 to 4/12	Double layer over entire roof[2]
Wood Shakes	Spaced	No. 30 asphalt saturated felt (interlayment)	4/12 and up	Underlayment starter course; interlayment over entire roof	Shakes not recommended on slopes less than 4/12 with spaced sheathing	
	Solid[3,5]	No. 30 asphalt saturated felt (interlayment)	4/12 and up	Underlayment starter course; interlayment over entire roof	3/12 to 4/12[4]	Single layer underlayment over entire roof; interlayment over entire roof
Wood Shingles	Spaced	None required	5/12 and up	None required	3/12 to 5/12[4]	None required
	Solid[5]	No. 15 asphalt saturated felt	5/12 and up	None required[6]	3/12 to 5/12[4]	None required[6]

Notes:
1. May be single layer on 4/12 slope in areas where outside design temperature is warmer than 0°F
2. Square-butt strip shingles only; requires wind-resistant shingles or cemented tabs
3. Recommended in areas subject to wind-driven snow
4. Requires reduced weather exposure
5. May be desirable for added insulation and to minimize air infiltration
6. May be desirable for protection of sheathing

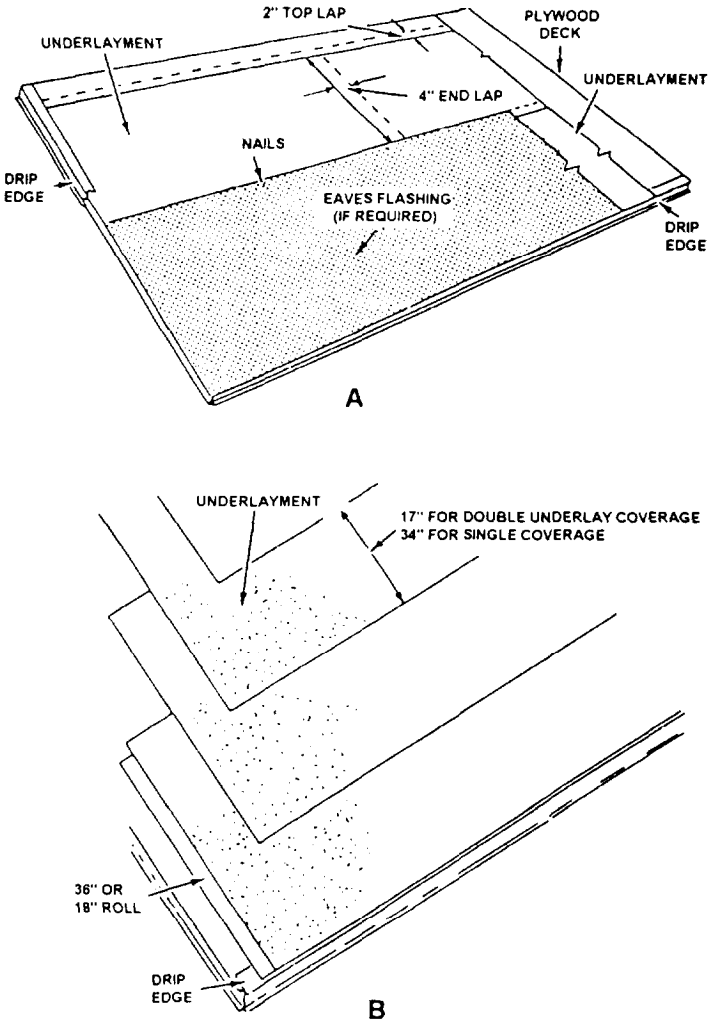

Figure 3-14.-Roofing underlayment: A. Single coverage; B. Double coverage.

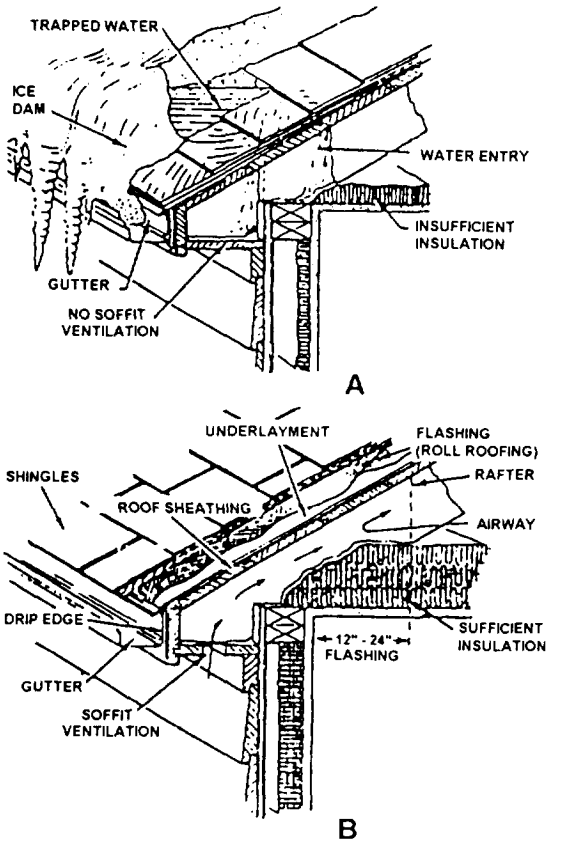

Figure 3-15.-Protection from ice dams A. Refreezing snow and ice; B. Cornice ventilation.

the roof with atop lap of at least 2 inches at all horizontal points and a 4-inch side lap at all end joints (fig. 3-14, view A). Lap the underlayment over all hips and ridges 6 inches on each side. A double underpayment can be started with two layers at the cave line, flush with the fascia board or molding. The second and remaining strips have 19-inch head laps with 17-inch exposures (fig. 3-14, view B). Cover the entire roof in this manner. Make sure that all surfaces have double coverage. Use only enough fasteners to hold the underpayment in place until the shingles are applied. Do not apply shingles over wet underpayment.

In areas where moderate-to-severe snowfall is common and ice dams occur, melting snow refreezes at the cave line (fig. 3-15, view A). It is a good practice to apply one course of 55-pound smooth-surface roll roofing as a flashing at the eaves. It should be wide enough to extend from the roof edge to between 12 and 24 inches inside the wall line. The roll roofing should be installed over the underpayment and metal drip edge. This will lessen the chance of melting snow to back up under the shingles and fascia board of closed cornices. Damage to interior ceilings and walls results from this water seepage. Protection from ice dams is provided by cave flashing. Cornice ventilation by means of soffit vents and sufficient insulation will minimize the melting (fig. 3-15, view B).

ASPHALT FELT.— Roofing felts are used as underpayment for shingles, for sheathing paper, and for reinforcements in the construction of built-up roofs. They are made from a combination of shredded wood fibers, mineral fibers, or glass fibers saturated with asphalt or coal-tar pitch. Sheets are usually 36 inches wide and available in various weights from 10 to 50 pounds. These weights refer to weight per square (100 feet).

ORGANIC FELTS.— Asphalt-saturated felts composed of a combination of felted papers and organic

shredded wood fibers are considered felts. They are among the least expensive of roofing felts and are widely used not only as roofing, but also as water and vapor retarders. Fifteen-pound felt is used under wood siding and exterior plaster to protect sheathing or wood studs. It is generally used in roofing for layers or plies in gravel-surfaced assemblies and is available perforated. Perforated felts used in built-up roofs allow entrapped moisture to escape during application. Thirty-pound felt requires fewer layers in a built-up roof. It is usually used as underlayment for heavier cap sheets or tile on steeper roofs.

GLASS-FIBER FELTS.— Sheets of glass fiber, when coated with asphalt, retain a high degree of porosity, assuring a maximum escape of entrapped moisture or vapor during application and maximum bond between felts. Melted asphalt is applied so that the finished built-up roof becomes a monolithic slab reinforced with properly placed layers of glass fibers. The glass fibers, which are inorganic and do not curl, help create a solid mass of reinforced waterproof rooting material.

TARRED FELTS.— Coal-tar pitch saturated organic felts are available for use with bitumens of the same composition. Since coal-tar and asphalt are not compatible, the components in any construction must be limited to one bitumen or the other unless approved by the felt manufacturer.

Flashing

The roof edges along the eaves and rake should have a metal drip edge, or flashing. Flashing is specially constructed pieces of sheet metal or other materials used to protect the building from water seepage. Flashing must be made watertight and be water shedding. Flashing materials used on roofs may be asphalt-saturated felt, metal, or plastic. Felt flashing is generally used at the ridges, hips, and valleys. However, metal flashing, made of aluminum, galvanized steel, or copper, is considered superior to felt. Metal used for flashing must be corrosion resistant. It should be galvanized steel (at least 26 gauge), 0.019-inch-thick aluminum, or 16-ounce copper.

Flashing is available in various shapes (fig. 3-16, view A), formed from 26-gauge galvanized steel. It should extend back approximately 3 inches from the roof edge and bend downward over the edge. This causes the water to drip free of underlying cornice construction. At the eaves, the underpayment should be laid over the drip edge (view B). At the rake (view C), place the underpayment under the drip edge. Galvanized nails, spaced 8 to 10 inches apart, are recommended for fastening the drip edge to the sheathing.

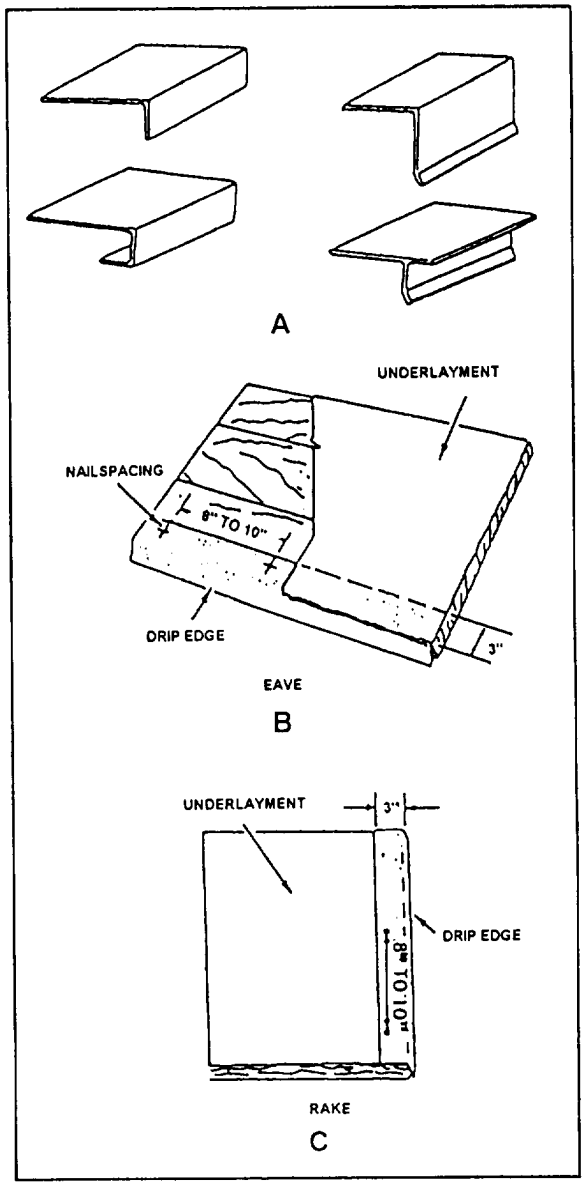

Figure 3-16.-Drip edges A. Basic shapes B. At the eave; C. At the rake.

The shape and construction of different types of roofs can create different types of water leakage problems. Water leakage can be prevented by placing flashing materials in and around the vulnerable areas of the roof. These areas include the point of intersection between roof and soil stack or ventilator, the valley of a roof, around chimneys, and at the point where a wall intersects a roof.

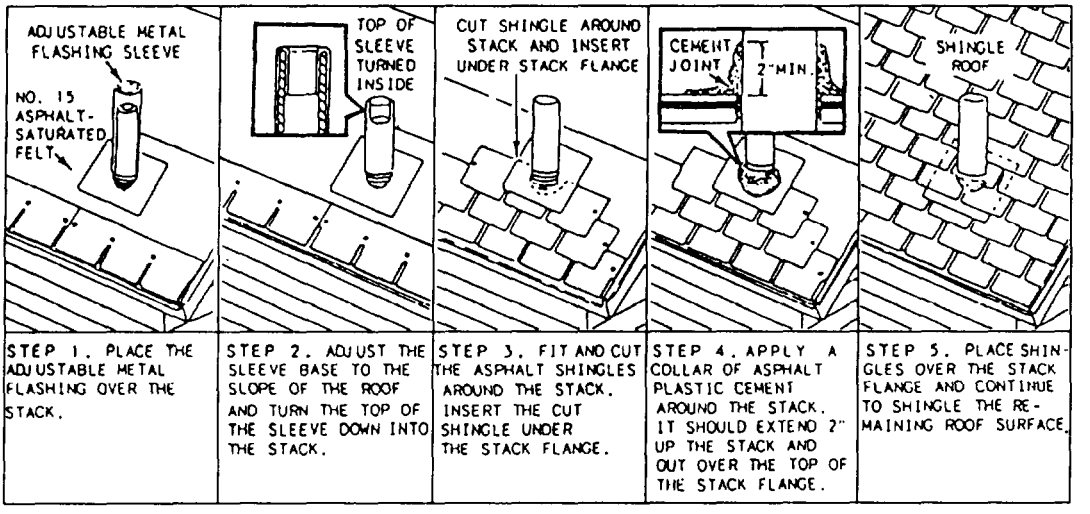

Figure 3-17.-Flashing around a roof projection.

As you approach a soil stack, apply the roofing up to the stack and cut it to fit (fig. 3-17). You then install a corrosion-resistant metal sleeve, which slips over the stack and has an adjustable flange to fit the slope of the roof. Continue shingling over the flange. Cut the shingles to fit around the stack and press them firmly into the cement.

The open or closed method can be used to construct valley flashing. A valley underpayment strip of 15-pound asphalt- saturated felt, 36 inches wide, is applied first. The strip is centered in the valley and secured with enough nails to hold it in place. The horizontal courses of underlayment are cut to overlap this valley strip a minimum of 6 inches.

Open valleys can be flashed with metal or with 90-pound mineral-surfaced asphalt roll roofing. The color can match or contrast with the roof shingles. An 18-inch-wide strip of mineral-surfaced roll rooting is placed over the valley underpayment. It is centered in the valley with the surfaced side down and the lower edge cut to conform to and be flush with the cave flashing. When it is necessary to splice the material, the ends of the upper segments are laid to overlap the lower segments 12 inches and are secured with asphalt plastic cement. This method is shown in figure 3-18. Only enough nails are used 1 inch in from each edge to hold the strip smoothly in place.

Another 36-inch-wide strip is placed over the first strip. It is centered in the valley with the surfaced side up and secured with nails. It is lapped the same way as the underlying 18-inch strip.

Before shingles are applied, a chalk line is snapped on each side of the valley. These lines should start 6 inches apart at the ridge and spread wider apart (at the rate of 1/8 inch per foot) to the eave (fig. 3-18). The

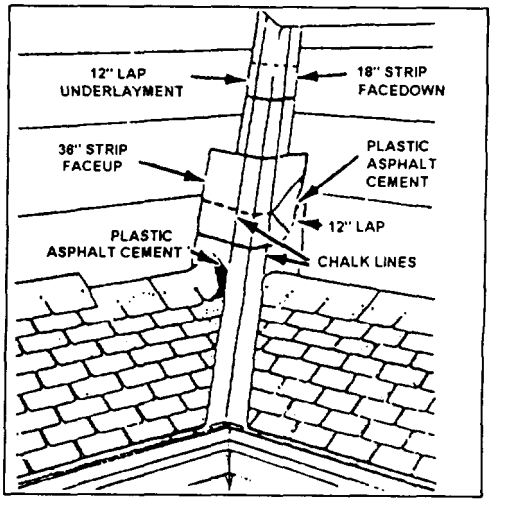

Figure 3-18.-Open valley flashing using roll roofing.

chalk lines serve as a guide in trimming the shingle units to fit the valley and ensure a clean, sharp edge. The upper corner of each end shingle is clipped to direct water into the valley and prevent water penetration between courses. Each shingle is cemented to the valley lining with asphalt cement to ensure a tight seal. No exposed nails should appear along the valley flashing.

Closed (woven) valleys can be used only with strip shingles. This method has the advantage of doubling the coverage of the shingles throughout the length of the valley. This increases the weather resistance at this vulnerable point. A valley lining made from a 36-inch-wide strip of 55-pound (or heavier) roll roofing is placed over the valley underpayment and centered in the valley (fig. 3-19).

Valley shingles are laid over the lining by either of two methods:

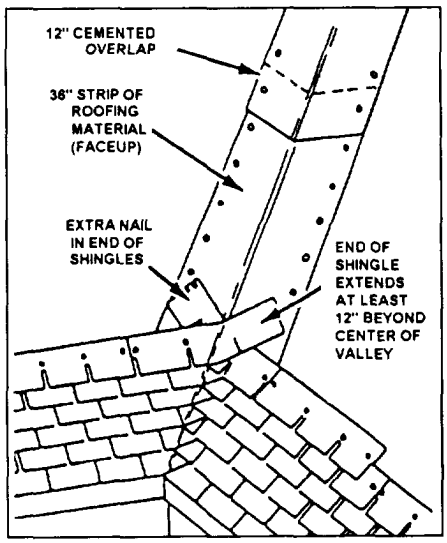

Figure 3-19.-Closed valley flashing.

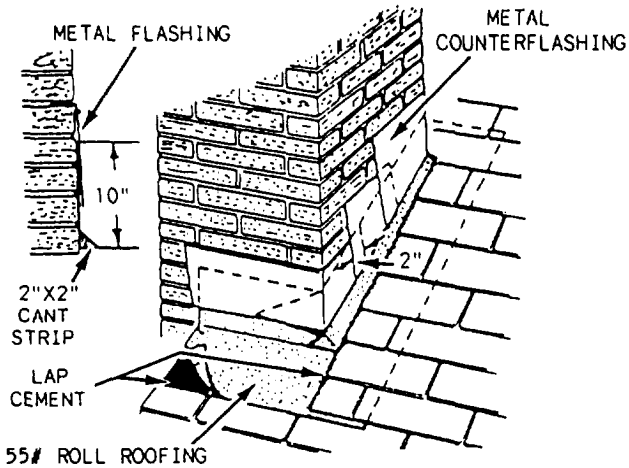

Figure 3-20.-Flashing around a chimney.

- They can be applied on both roof surfaces at the same time with each course, in turn, woven over the valley.
- Each surface can be covered to the point approximately 36 inches from the center of the valley and the valley shingles woven in place later.

In either case, the first course at the valley is laid along the eaves of one surface over the valley lining and extended along the adjoining roof surface for a distance of at least 12 inches. The first course of the adjoining roof surface is then carried over the valley on top of the previously applied shingle. Succeeding courses are then laid alternately, weaving the valley shingles over each other.

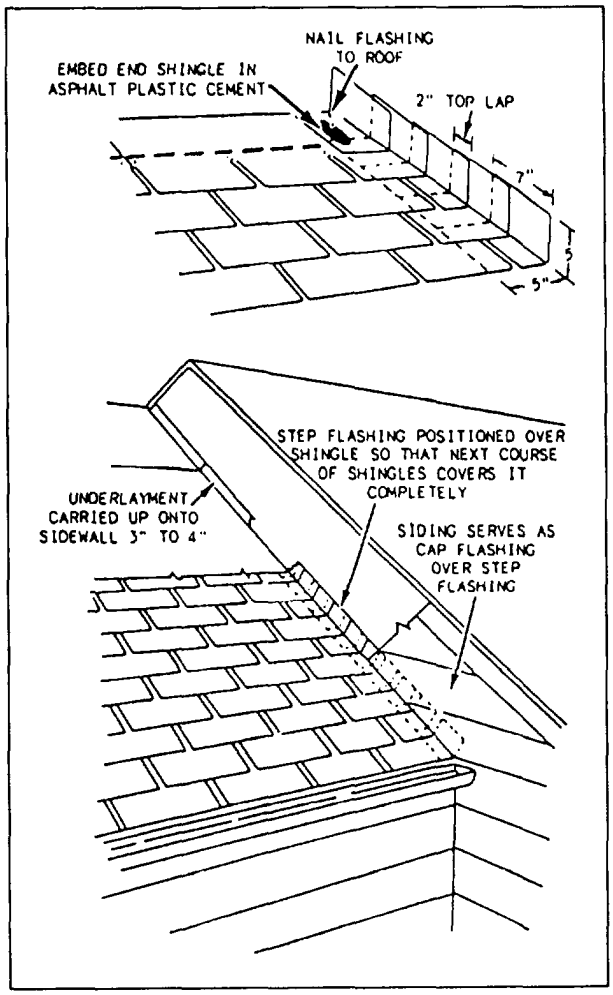

Figure 3-21.-Step flashing.

The shingles are pressed tightly into the valley and nailed in the usual manner. No nail should be located closer than 6 inches to the valley center line, and two nails should be used at the end of each terminal strip.

As you approach a chimney, apply the shingles over the felt up to the chimney face. If 90-pound roll roofing is to be used for flashing, cut wood cant strips and install them above and at the sides of the chimney (fig. 3-20). The roll roofing flashing should be cut to run 10 inches up the chimney. Working from the bottom up, fit metal counterflashing over the base flashing and insert it 1 1/2 inches into the mortar joints. Refill the joints with mortar or roofing cement. The counterflashing can also be installed when the chimney masonry work is done,

Where the roof intersects a vertical wall, it is best to install metal flashing shingles. They should be 10 inches long and 2 inches wider than the exposed face of the regular shingles. The 10-inch length is bent so that it will extend 5 inches over the roof and 5 inches up the wall (see figure 3-21). Apply metal flashing with each

course. This waterproofs the joint between a sloping roof and vertical wall. This is generally called step flashing.

As each course of shingles is laid, a metal flashing shingle is installed and nailed at the top edge as shown. Do not nail flashing to the wall; settling of the roof frame could damage the seal.

Wall siding is installed after the roof is completed. It also serves as a cap flashing. Position the siding just above the roof surface. Allow enough clearance to paint the lower edges.

Roof Cements

Roofing cements are used for installing cave flashing, for flashing assemblies, for cementing tabs of asphalt shingles and laps in sheet material, and for repairing roofs. There are several types of cement, including plastic asphalt cements, lap cements, quick-setting asphalt adhesives, roof coatings, and primers. The type and quality of materials and methods of application on a shingle roof should follow the recommendation of the manufacturer of the shingle roofing.

Exterior

Basically, exterior roof treatment consists of applying various products, including shingles, roll roofing, tiles, slate, and bituminous coverings. Treatment also includes specific construction considerations for ridges, hips, and valleys.

SHINGLES.— The two most common shingle types are asphalt and fiberglass, both of which come in various strip shapes.

Asphalt.— Asphalt (composition) shingles are available in several patterns. They come in strip form or as individual shingles. The shingles are manufactured on a base of organic felt (cellulose) or an inorganic glass mat. The felt or mat is covered with a mineral-stabilized coating of asphalt on the top and bottom. The top side is coated with mineral granules of specified color. The bottom side is covered with sand, talc, or mica.

Fiberglass.— Improved technologies have made the fiberglass mat competitive with organic felt. The weight and thickness of a fiberglass mat is usually less than that of organic felt. A glass fiber mat maybe 0.030 inch thick versus 0.055 inch thick for felt. The popularity of fiberglass-based shingles is their low cost. The mat does not have to be saturated in asphalt. ASTM standards specify 3 pounds per 100 feet. The

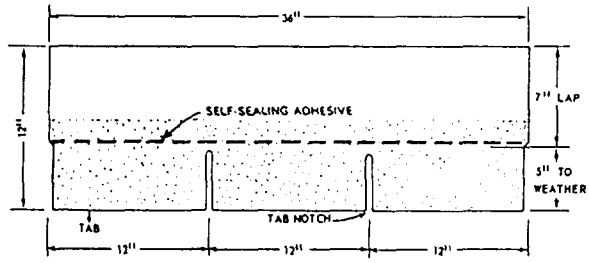

Figure 3-22.-A typical 12- by 36-inch shingle.

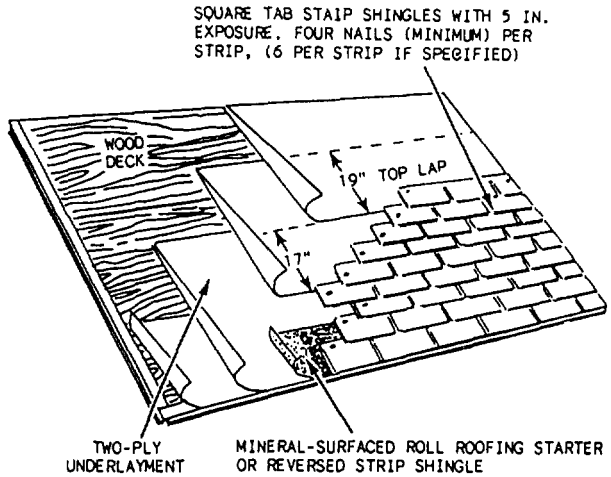

Figure 3-23.-Special shingle application.

combination of glass fiber mats with recently developed resins has significantly lowered the price of composition shingles.

Strip.— One of the most common shapes of asphalt or fiberglass shingles is a 12- by 36-inch strip (fig. 3-22) with the exposed surface cut or scored to resemble three 9-by 12-2- inch shingles. These are called strip shingles. They are usually laid with 5 inches exposed to the weather. A lap of 2 to 3 inches is usually provided over the upper edge of the shingle in the course directly below. This is called the head lap.

The thickness of asphalt shingles may be uniform throughout, or, as with laminated shingles, slotted at the butts to give the illusion of individual units. Strip shingles are produced with either straight-tab or random-tab design to give the illusion of individual units or to simulate the appearance of wood shakes. Most strip shingles have factory-applied adhesive spaced at intervals along the concealed portion of the strip. These strips of adhesive are activated by the warmth of the sun and hold the shingles firm through wind, rain, and snow.

Strip shingles are usually laid over a single thickness of asphalt-saturated felt if the slope of the roof

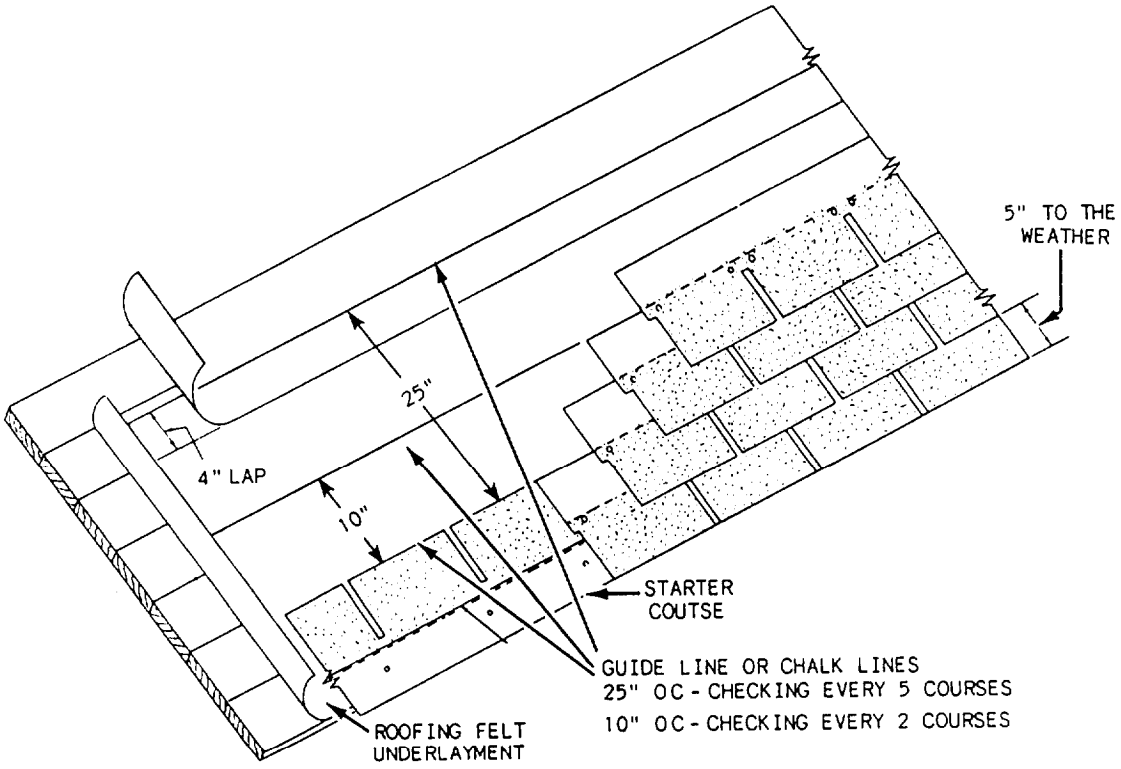

Figure 3-24.-Laying out a shingle roof.

is 4:12 or greater. When special application methods are used, organic- or inorganic-base-saturated or coated-strip shingles can be applied to decks having a slope of 4:12, but not less than 2:12. Figure 3-23 shows the application of shingles over a double layer of underpayment. Double underpayment is recommended under square-tab strip shingles for slopes less than 4:12.

When roofing materials are delivered to the building site, they should be handled with care and protected from damage. Try to avoid handling asphalt shingles in extreme heat or cold. They are available in one-third-square bundles, 27 strip shingles per bundle. Bundles should be stored flat so the strips will not curl after the bundles are open. To get the best performance from any roofing material, always study the manufacturer's directions and install as directed.

On small roofs (up to 30 feet long), strip shingles can be laid starting at either end. When the roof surface is over 30 feet long, it is usually best to start at the center and work both ways. Start from a chalk line perpendicular to the eaves and ridge.

Asphalt shingles will vary slightly in length (plus or minus 1/4 inch in a 36-inch strip). There may also be some variations in width. Thus, chalk lines are required to achieve the proper horizontal and vertical placement of the shingles (fig. 3-24).

The first chalk line from the cave should allow for the starter strip and/or the first course of shingles to overhang the drip edge 1/4 to 3/8 inch.

When laying shingles from the center of the roof toward the ends, snap a number of chalk lines between the eaves and ridge. These lines will serve as reference marks for starting each course. Space them according to the shingle type and laying pattern.

Chalk lines, parallel to the eaves and ridge, will help maintain straight horizontal lines along the butt edge of the shingle. Usually, only about every fifth course needs to be checked if the shingles are skillfully applied. Inexperienced workers may need to set up chalk lines for every second course.

The purpose of a starter strip is to back up the first course of shingles and fill in the space between the tabs. Use a strip of mineral-surfaced roofing 9 inches or wider of a weight and color to match the shingles. Apply the strip so it overhangs the drip edge 1/4 to 3/8 inch above the edge. Space the nails so they will not be exposed at the cutouts between the tabs of the first course of shingles. Sometimes an inverted (tabs to ridge) row of shingles is used instead of the starter strip. When you

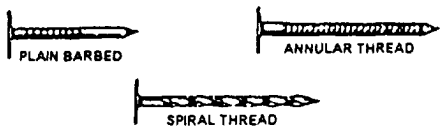

A

APPLICATION	1" SHEATHING	3/8" PLYWOOD
STRIP OR INDIVIDUAL SHINGLE (NEW CONSTRUCTION)	$1\frac{1}{4}$"	$\frac{7}{8}$"
OVER ASPHALT ROOFING (REROOFING)	$1\frac{1}{2}$"	1"
OVER WOOD SHINGLES (REROOFING)	$1\frac{3}{4}$"	–

B

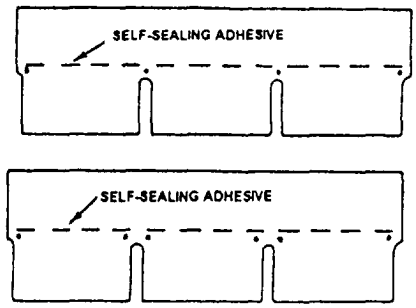

C

Figure 3-25.-Nails suitable for installing strip shingles, recommended nail lengths, and nail placement.

are laying self-sealing strip shingles in windy areas, the starter strip is often formed by cutting off the tabs of the shingles being used. These units are then nailed in place, right side up, and provide adhesive under the tabs of the first course.

Nails used to apply asphalt roofing must have a large head (3/8- to 7/16-inch diameter) and a sharp point. Figure 3-25 shows standard nail designs (view A) and recommended lengths (view B) for nominal 1-inch sheathing. Most manufacturers recommend 12-gauge galvanized steel nails with barbed shanks. Aluminum nails are also used. The length should be sufficient to penetrate the full thickness of the sheathing or 3/4 inch into the wood.

The number of nails and correct placement are both vital factors in proper application of rooting material. For three-tab square-butt shingles, use a minimum of four nails per strip (fig. 3-25, view C). Specifications may require six nails per shingle (view C). Align each shingle carefully and start the nailing from the end next to the one previously laid. Proceed across the shingle. This will prevent buckling. Drive nails straight so that the edge of the head will not cut into the shingle. The nail head should be driven flush, not sunk into the surface. If, for some reason, the nail fails to hit solid sheathing, drive another nail in a slightly different location.

WOOD SHINGLES AND SHAKES.— Wood shingles are available in three standard lengths: 16, 18, and 24 inches. The 16-inch length is the most popular. It has five-butt thicknesses per 2 inches of width when it is green (designated a 5/2). These shingles are packed in bundles. Four bundles will cover 100 square feet of wall or roof with 5-inch exposure. The 18- or 24-inch-long shingles have thicker butts-five in 2 1/4 inches for the 18-inch shingles and four in 2 inches for 24-inch shingles. The recommended exposures for the standard wood-shingle size are shown in table 3-6.

Figure 3-26 shows the proper method of applying a wood-shingle roof. Underpayment or roofing felt is not required for wood shingles except for protection in ice jam areas. Although spaced or solid sheathing is optional, spaced roof sheathing under wood shingles is most common. Observe the following steps when applying wood shingles:

1. Extend the shingles 1 1/2 inches beyond the cave line and 3/4 inch beyond the rake (gable) edge.

Table 3-6.-Recommended Exposure for Wood Shingles

SHINGLE LENGTH	SHINGLE THICKNESS (Green)	MAXIMUM EXPOSURE	
		Slope less than 4 in 12	Slope 5 in 12 and over
Inches		Inches	Inches
16	5 butts in 2"	3 3/4	5
18	5 butts in 2 1/4"	4 1/4	5 1/2
24	4 butts in 2"	5 3/4	7 1/2

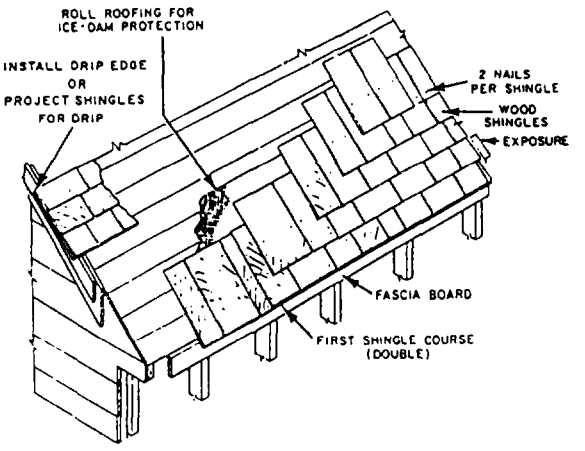

Figure 3-26.-Installation of wood shingles.

2. Use two rust-resistant nails in each shingle. Space them 3/4 inch from the edge and 1 1/2 inches above the butt line of the next course.
3. Double the first course of shingles. In all courses, allow 1/8- to 1/4-inch space between each shingle for expansion when they are wet. Offset the joints between the shingles at least 1 1/2 inches from the joints in the course below. In addition, space the joints in succeeding courses so that they do not directly line up with joints in the second course below.
4. Where valleys are present, shingle away from them. Select and precut wide valley shingles.
5. Use metal edging along the gable end to aid in guiding the water away from the sidewalls.
6. Use care when nailing wood shingles. Drive the nails just flush with the surface. The wood in shingles is soft and can be easily crushed and damaged under the nail heads.

Wood shakes are usually available in several types, but the split-and-resawed type is the most popular. The sawed face is used as the back face and is laid flat on the roof. The butt thickness of each shake ranges between 3/4 inch and 1 1/2 inches. They are usually packed in bundles of 20 square feet with five bundles to the square.

Wood shakes are applied in much the same way as wood shingles. Because shakes are much thicker (longer shakes have the thicker butts), use long galvanized nails. To create a rustic appearance, lay the butts unevenly. Because shakes are longer than shingles, they have greater exposure. Exposure distance is usually 7 1/2 inches for 18-inch shakes, 10 inches for 24-inch shakes, and 13 inches for 32-inch shakes. Shakes are not smooth on both faces, and because wind-driven rain or snow might enter, it is essential to use an underpayment between each course. A layer of felt should be used between each course with the bottom edge positioned above the butt edge of the shakes a distance equal to double the weather exposure. A 36-inch-wide strip of the asphalt felt is used at the cave line. Solid sheathing should be used when wood shakes are used for roofs in areas where wind-driven snow is common.

ROLL ROOFING.— Roll roofing is made of an organic or inorganic felt saturated with an asphalt coating and has a viscous bituminous coating. Finely ground talc or mica can be applied to both sides of the saturated felt to produce a smooth roofing. Mineral granules in a variety of colors are rolled into the upper surface while the final coating is still soft. These mineral granules protect the underlying bitumen from the deteriorating effects of sun rays. The mineral aggregates are nonflammable and increase the fire resistance and improve the appearance of the underlying bitumen. Mineral-surfaced roll roofing comes in weights of 75 to 90 pounds per square. Roll roofing may have one surface completely covered with granules or have a 2-inch plain-surface salvage along one side to allow for laps.

Roll roofing can be installed by either exposed or concealed nailing. Exposed nailing is the cheapest but doesn't last as long. This method uses a 2-inch lap at the side and ends. It is cemented with special cement and nailed with large-headed nails. In concealed-nailing installations, the roll roofing is nailed along the top of the strip and cemented with lap cement on the bottom edge. Vertical joints in the roofing are cemented into place after the upper edge is nailed. This method is used when maximum service life is required.

Double-coverage roll roofing is produced with slightly more than half its surface covered with granules. This roofing is also known as 19-inch salvage edge. It is applied by nailing and cementing with special adhesives or hot asphalt. Each sheet is lapped 19 inches, blind-nailed in the lapped salvage portion, and then cemented to the sheet below. End laps are cemented into place.

TILES.— Roofing tile was originally a thin, solid unit made by shaping moist clay in molds and drying it in the sun or in a kiln. Gradually, the term has come to include a variety of tile-shaped units made of clay, Portland cement, and other materials. Tile designs have come down to us relatively unchanged from the Greeks and Remans. Roofing tiles are durable, attractive, and

Table 3-7.-Weight of Roofing Materials

MATERIAL	LB WEIGHT/SQUARE (100 sq ft)	KG WEIGHT/ 9.29 m²
Tin	100	45
Roll roofing	100	45
Asphalt shingles	130-320	59-145
Copper	150	68
Corrugated iron	200	91
Wood shingles	300	136
Asbestos-cement shingles	500	227
Portland cement shingles	500-900	227-408
Built-up roof	600	272
Sheet lead	600-800	272-363
Slate		
1/4"	700	318
3/8"	1,000	454
3/4"	1,500	680
Flat clay tile	1200	544
Clay shingles	1,100-1,400	499-635
Spanish clay tile	1,900	862
laid in mortar	2,900	1,315

resistant to fire; however, because of their weight (table 3-7), they usually require additional structural framing members and heavier roof decks.

Clay.— The clays used in the manufacture of roofing tile are similar to those used for brick. Unglazed tile comes in a variety of shades, from a yellow-orange to a deep red, and in blends of grays and greens. Highly glazed tiles are often used on prominent buildings and for landmark purposes.

Clay roofing tiles are produced as either flat or roll tile. Flat tile may be English (interlocking shingle) or French. Roll tiles are produced in Greek or Roman pan-and-cover, Spanish or Mission style (fig. 3-27).

Roll Tile.— Roll tile is usually installed over two layers of hot-mopped 15-pound felt. Double-coverage felts, laid shingle fashion, lapped 19 inches, and mopped with hot asphalt, may be required as an underpayment. The individual tiles are nailed to the sheathing through prepunched holes. Special shapes are available for starter courses, rakes, hips, and ridges. Some manufacturers produce tiles in special tile-and-a-half units for exposed locations, such as gables and hips.

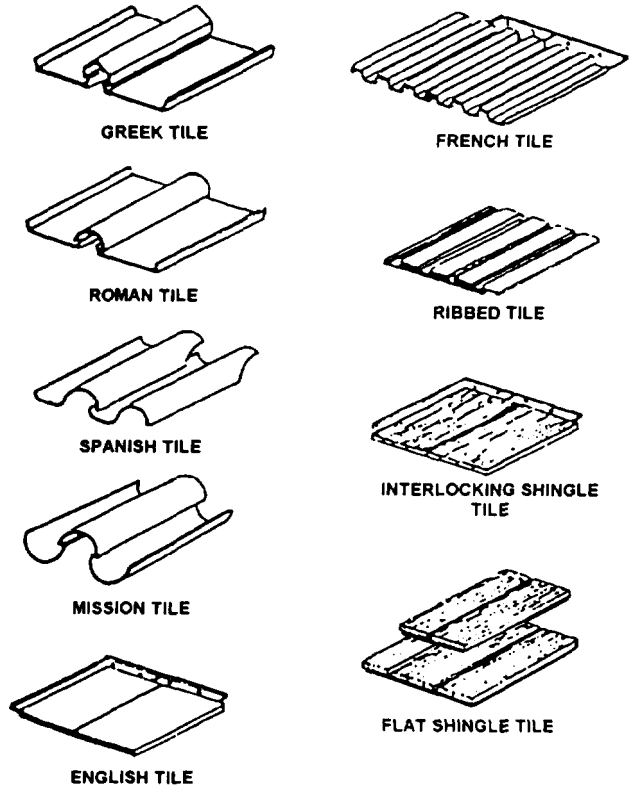

Figure 3-27.-Types of clay roof tiles.

Mission Tile.— Mission tiles are slightly tapered half-round units and are set in horizontal courses. The convex and concave sides are alternated to form pans and covers. The bottom edges of the covers can be laid with a random exposure of 6 to 14 inches to weather. Mission tile can be fastened to the prepared roof deck with copper nails, copper wire, or specially designed brass strips. The covers can be set in portland cement mortar. This gives the roof a rustic appearance, but it adds approximately 10 pounds per square to the weight of the finished roof.

Flat Tile.— Flat tile can be obtained as either flat shingle or interlocking. Single tiles are butted at the sides and lapped shingle fashion. They are produced in various widths from 5 to 8 inches with a textured surface to resemble wood shingles, with smooth colored surfaces, or with highly glazed surfaces. Interlocking shingle tiles have side and top locks, which permit the use of fewer pieces per square. The back of this type of tile is ribbed. This reduces the weight without sacrificing strength. Interlocking flat tile can be used in combination with lines of Greek pan-and-cover tile as accents.

Concrete.— The acceptance of concrete tile as a roofing material has been slow in the United States. However, European manufacturers have invested heavily in research and development to produce a uniformly high-quality product at a reasonable cost. Concrete tile is now used on more than 80 percent of all new residences in Great Britain. Modern high-speed machinery and techniques have revolutionized the industry in the United States, and American-made concrete tiles are now finding a wide market, particularly in the West.

Concrete roof tile, made of Portland cement, sand, and water, is incombustible. It is also a poor conductor of heat. These characteristics make it an ideal roofing material in forested or brushy areas subject to periodic threats of fire. In addition, concrete actually gains strength with age and is unaffected by repeated freezing and thawing cycles.

Color pigments may be mixed with the basic ingredients during manufacture. To provide a glazed surface, cementitious mineral-oxide pigments are sprayed on the tile immediately after it is extruded. This glaze becomes an integral part of the tile. The surface of these tiles may be scored to give the appearance of rustic wood shakes.

Most concrete tiles are formed with side laps consisting of a series of interlocking ribs and grooves. These are designed to restrict lateral movement and provide weather checks between the tiles. The underside of the tile usually contains weather checks to halt wind-blown water. Head locks, in the form of lugs, overlap wood battens roiled to solid sheathing or strips of spaced sheathing. Nail holes are prepunched The most common size of concrete tile is 123/8 by 17 inches. This provides for maximum coverage with minimum lapping,

Concrete tiles are designed for minimum roof slopes of 2 1/2:12. For slopes up to 3 1/2:12, roof decks are solidly sheeted and covered with roofing felt. For slopes greater than 3 1/2:12, the roof sheathing can be spaced. Roofing felt is placed between each row to carry any drainage to the surface of the next lower course of tile. The lugs at the top of the tiles lock over the sheathing or stripping. Generally, only every fourth tile in every fourth row is nailed to the sheathing, except where roofs are exposed to extreme winds or earthquake conditions. The weight of the tile holds it in place.

Lightweight concrete tile is now being produced using fiberglass reinforcing and a lightweight perlite aggregate. These tiles come in several colors and have the appearance of heavy cedar shakes. The weight of these shingles is similar to that of natural cedar shakes, so roof reinforcing is usually unnecessary.

SLATE.— Slate roofing is hand split from natural rock. It varies in color from black through blue-gray, gray, purple, red and green. The individual slates may have one or more darker streaks running across them. These are usually covered during the laying of the slate. Most slate rooting is available in sizes from 10 by 6 to 26 by 14 inches. The standard thickness is 3/16 inch, but thicknesses of 1/4, 3/8, 1/2, and up to 2 inches can be obtained. Slate may be furnished in a uniform size or in random widths. The surface may be left with the rough hand-split texture or ground to a smoother texture.

The weight of a slate roof ranges from 700 to 1,500 pounds per square, depending upon thickness. The size of framing members supporting a slate roof must be checked against the weight of the slate and method of laying. The type of underpayment used for a slate roof varies, depending on local codes. The requirement ranges from one layer of 15-pound asphalt-saturated felt to 65-pound rolled asphalt roofing for slate over 3/4 inch thick.

Slate is usually laid like shingles with each course lapping the second course below at least 3 inches. The slates can be laid in even rows or at random. Each slate is predrilled with two nail holes and is held in place with

two large-headed slaters' nails. These are made of hard copper wire, cut copper, or cut brass. On hips, ridges, and in other locations where nailing is not possible, the slates are held in place with waterproof elastic slaters' cement colored to match the slate. Exposed nail heads are covered with the same cement.

BITUMENS.— Hot bituminous compounds (bitumens) are used with several types of roofing systems. Both asphalt and coal-tar pitch are bitumens. Although these two materials are similar in appearance, they have different characteristics. Asphalt is usually a product of the distillation of petroleum, whereas coal-tar pitch is a byproduct of the coking process in the manufacture of steel.

Some asphalts are naturally occurring or are found in combination with porous rock. However, most roofing asphalts are manufactured from petroleum crudes from which the lighter fractions have been removed. Roofing asphalts are available in a number of different grades for different roof slopes, climatic conditions, or installation methods.

Roofing asphalts are graded on the basis of their softening points, which range from a low of 135°F (57.2°C) to a high of 225°F (107.2°C). The softening point is not the point at which the asphalt begins to flow, but is determined by test procedures established by the ASTM. Asphalts begin to flow at somewhat lower temperatures than their softening points, depending on the slope involved and the weight of the asphalt and surfacing material.

Generally, the lower the softening point of an asphalt, the better its self-healing properties and the less tendency it has to crack. Dead-flat roofs, where water may stand, or nearly flat roofs, require an asphalt that has the greatest waterproofing qualities and the self-healing properties of low-softening asphalts. A special asphalt known as dead-flat asphalt is used in such cases. As the slope of the roof increases, the need for waterproofing is lessened, and an asphalt that will not flow at expected normal temperatures must be used. For steeper roofing surfaces, asphalt with a softening point of 185°F to 205°F (85°C to 96.1°C) is used. This material is classed as steep asphalt. In hot, dry climates only the high-temperature asphalts can be used.

The softening point of coal-tar pitch generally ranges from 140°F to 155°F (60.0°C to 68.3°C). The softening point of coal-tar pitch limits its usefulness; however, it has been used successfully for years in the eastern and middle western parts of the United States on dead-level or nearly level roofs. In the southwest, where roof surfaces often reach temperatures of 126°F to 147°F (52.2°C to 63.9°C) in the hot desert sun, the low-softening point of coal-tar pitch makes it unsuitable as a roof surfacing material.

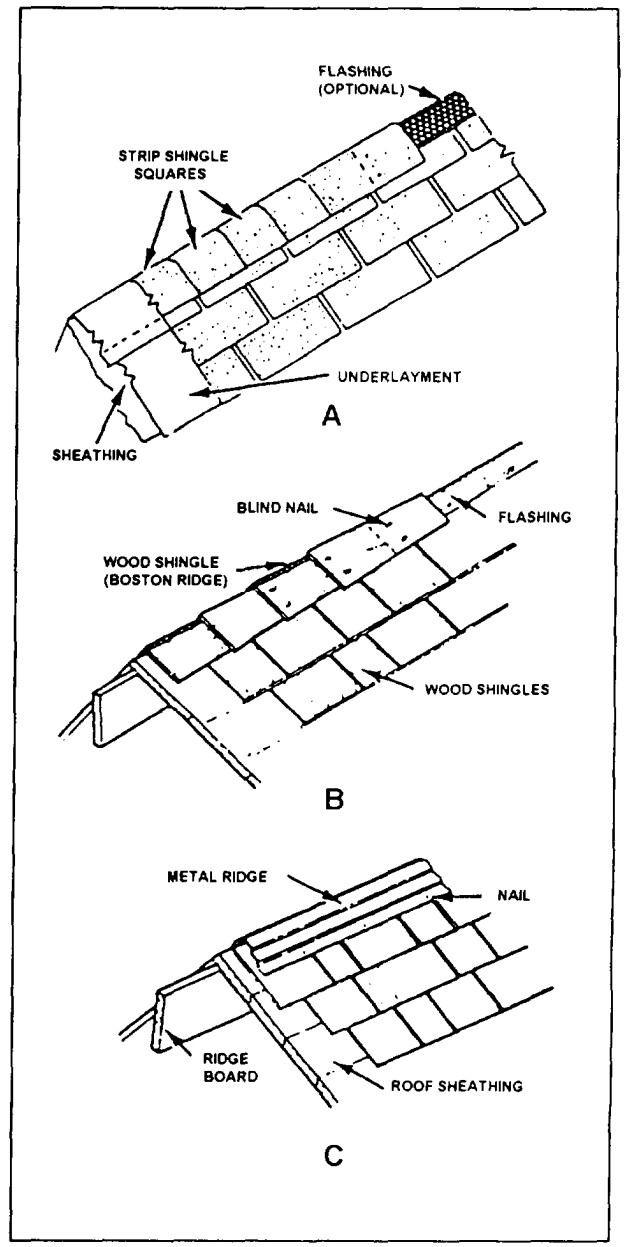

Figure 3-28.-Finish at the ridge: A. Boston ridge with strip shingles; B. Boston ridge with wood shingles; C. Metal ridge.

When used within its limitations on flat and low-pitched roofs in suitable climates, coal-tar pitch provides one of the most durable roofing membranes. Coal-tar pitch is also reputed to have cold-flow, or self-healing, qualities. This is because the molecular structure of pitch is such that individual molecules have a physical attraction for each other, so self-sealing is not

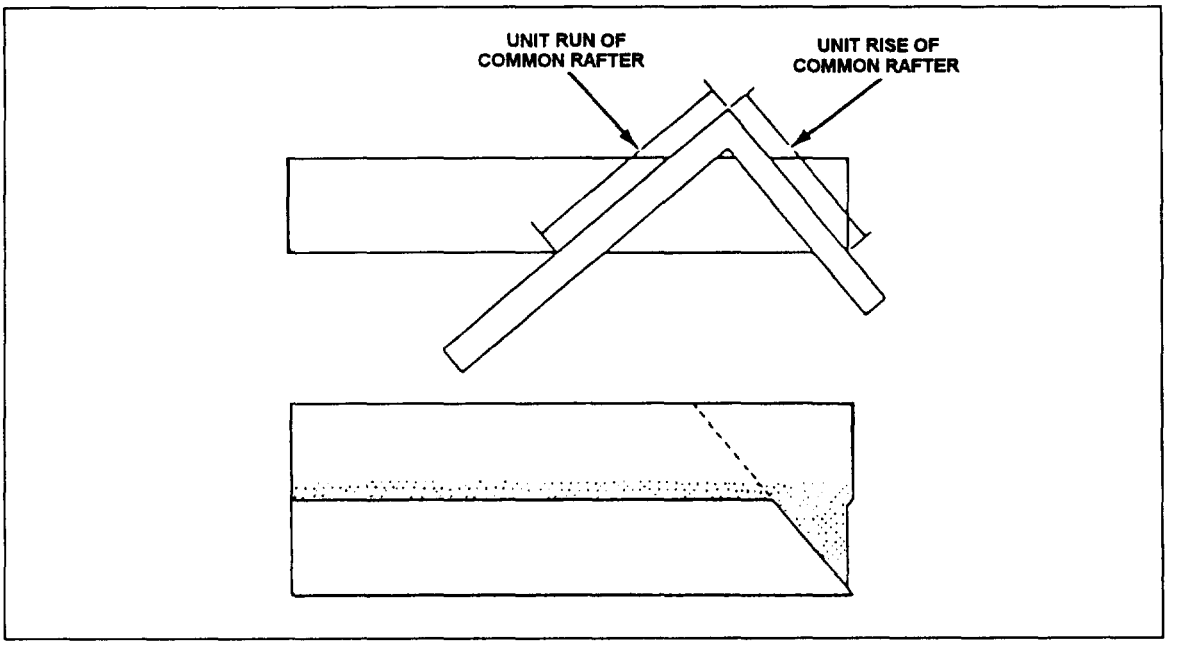

Figure 3-29.-Layout pattern for hip and valley shingles.

dependent on heat. Coal-tar pitch roofs are entirely unaffected by water. When covered by mineral aggregate, standing water may actually protect the volatile oils.

CONSTRUCTION CONSIDERATIONS.— Laying rooting on a flat surface is a relatively easy procedure. Correctly applying materials to irregular surfaces, such as ridges, hips, and valleys, is somewhat more complex.

Ridge.— The most common type of ridge and hip finish for wood and asphalt shingles is the Boston ridge. Asphalt-shingle squares (one-third of a 12- by 36-inch strip) are used over the ridge and blind-nailed (fig. 3-28, view A). Each shingle is lapped 5 to 6 inches to give double coverage. In areas where driving rains occur, use metal flashing under the shingle ridge to help prevent seepage. The use of a ribbon of asphalt roofing cement under each lap will also help.

A wood-shingle roof should be finished with a Boston ridge (fig. 3-28, view B). Shingles, 6 inches wide, are altemately lapped, fitted, and blind-nailed. As shown, the shingles are nailed in place so that the exposed trimmed edges are alternately lapped. Reassembled hip and ridge units for wood-shingle roofs are available and save both time and money.

A metal ridge can also be used on asphalt-shingle or wood-shingle roofs (fig. 3-28, view C). This ridge is formed to the roof slope and should be copper, galvanized iron, or aluminum. Some metal ridges are formed so that they provide an outlet ventilating area. However, the design should be such that it prevents rain or snow from blowing in.

Hips and Valleys.— One side of a hip or valley shingle must be cut at an angle to obtain an edge that will match the line of the hip or valley rafter. One way to cut these shingles is to use a pattern. First, select a 3 foot long 1 by 6. Determine the unit length of a common rafter in the roof (if you do not already know it). Set the framing square on the piece to get the unit run of the common rafter on the blade and the unit rise of the common rafter on the tongue (fig. 3-29). Draw a line along the tongue; then saw the pattern along this line. Note: The line cannot be used as a pattern to cut a hip or valley.

Built-up Rooting

A built-up roof, as the name indicates, is built up in alternate plies of roofing felt and bitumen. The bitumen forms a seamless, waterproof, flexible membrane that conforms to the surface of the roof deck and protects all angles formed by the roof deck and projecting surfaces, Without the reinforcement of the felts, the bitumens would crack and alligator and thus lose their volatile oils under solar radiation.

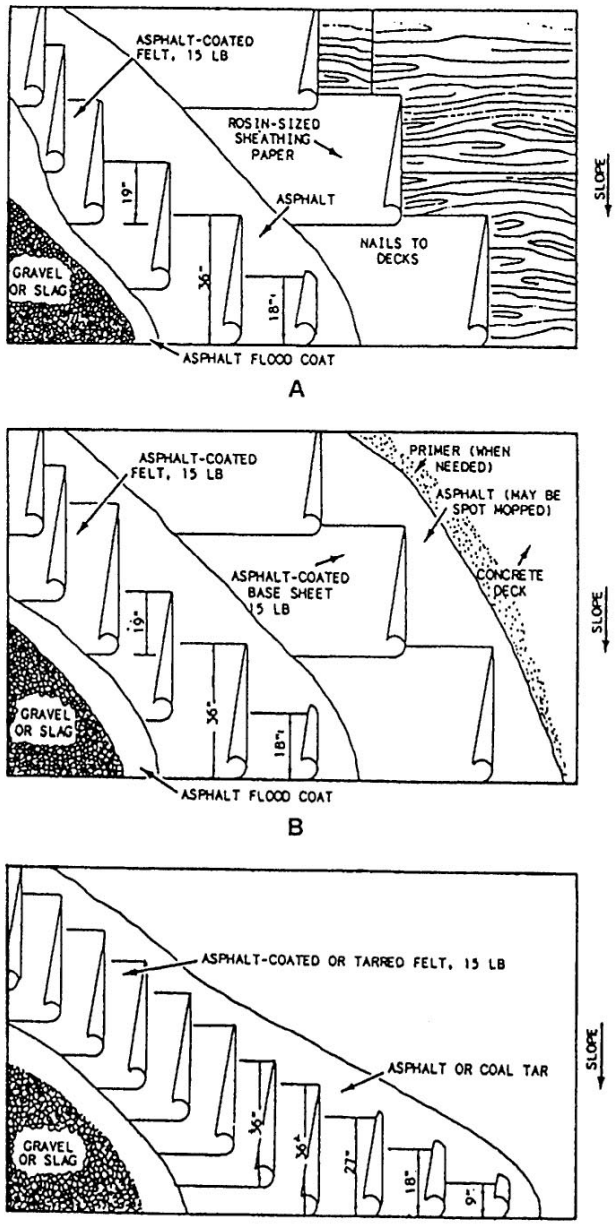

Figure 3-30.-Types of built-up roofing.

APPLICATION OF BITUMENS.—The method of applying roofing depends on the type of roof deck. Some roof decks are nailable and others are not. Figure 3-30 shows examples of wood deck (nailable), concrete deck (not nailable), and built-up roof over insulation. Nailable decks include such materials as wood or fiberboard, poured or precast units of gypsum, and nail able lightweight concrete. Non-nailable decks of concrete or steel require different techniques of roofing. View A of figure 3-30 shows a three-ply built-up roof over a nailable deck, with a gravel or slag surface. View B shows a three-ply built-up roof over a non-nailable deck with a gravel or slag surface. View C shows a four-ply built-up roof over insulation, with a gravel or slag surface.

The temperatures at which bitumens are applied are very critical. At high temperatures, asphalt is seriously damaged and its life considerably shortened. Heating asphalt to over 500°F (260°C) for a prolonged period may decrease the weather life by as much as 50 percent. Coal-tar pitch should not be heated above 400°F (204°C). Asphalt should be applied to the roof at an approximate temperature of 375°F to 425°F (190.6°C to 218.3°C), and coal-tar pitch should be applied at 275°F to 375°F (135°C to 190°C).

Bitumens are spread between felts at rates of 25 to 35 pounds per square, depending on the type of ply or roofing felt. An asphalt primer must be used over concrete before the hot asphalt is applied. It usually is unnecessary to apply a primer under coal-tar pitch. With wood and other types of nailable decks, the ply is nailed to the deck to seal the joints between the units and prevent dripping of the bitumens through the deck.

Built-up roofs are classed by the number of plies of felt that is used in their construction. The roof maybe three-ply, four-ply, or five-ply, depending on whether the roofing material can be nailed to the deck whether insulation is to be applied underneath it, the type of surfacing desired, the slope of the deck, the climatic conditions, and the life expectancy of the roofing.
The ply-and-bitumen membrane of a built-up roof must form a flexible covering that has sufficient strength to withstand normal structure expansion. Most built-up roofs have a surfacing over the last felt ply. This protective surfacing can be applied in several ways.

SURFACING.—Glaze-coat and gravel surfaces are the most commonly seen bituminous roofs.

Glaze Coat.—A coat of asphalt can be flooded over the top layer of felt. This glaze coat protects the top layer of felt from the rays of the sun. The glaze coat is black, but it maybe coated with white or aluminum surfacing to provide a reflective surface.

Gravel.—A flood coat of bitumen (60 pounds of asphalt or 70 pounds of coal-tar pitch per square) is applied over the top ply. Then a layer of aggregate, such as rock gravel, slag, or ceramic granules, is applied while the flood coat is still hot. The gravel weighs

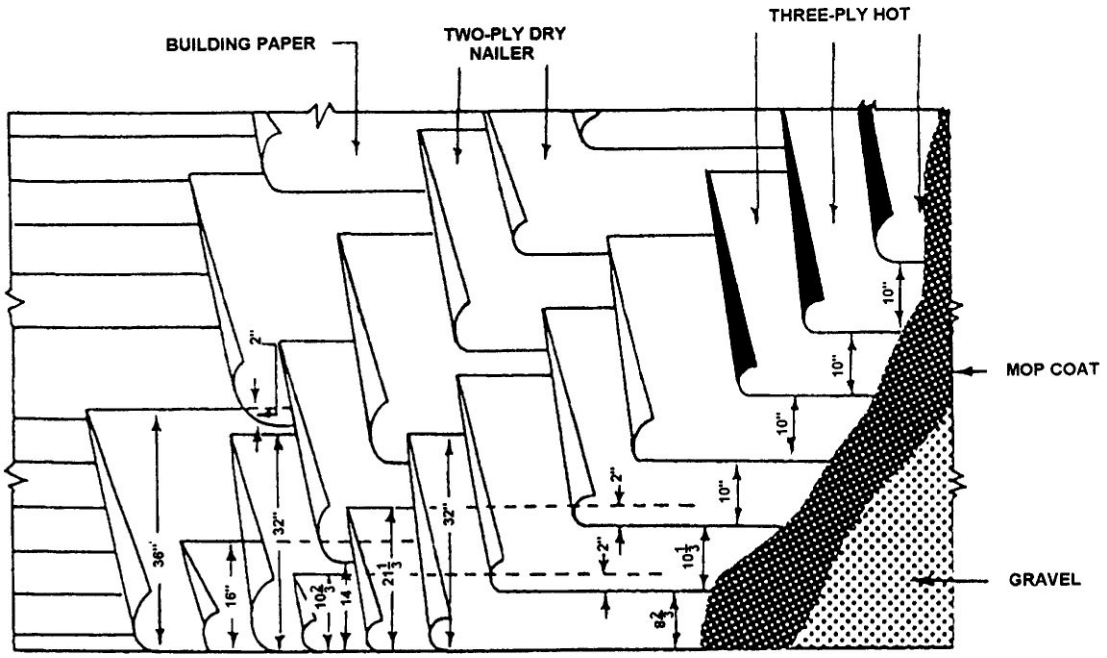

Figure 3-31.-Laying a five-ply built-up roof.

approximately 400 pounds per square and the slag 325 pounds per square. Other aggregates would be applied at a rate consistent with their weight and opacity. The surface aggregate protects the bitumen from the sun and provides a fire-resistant coating.

CAP SHEETS.—A cap sheet surface is similar to gravel-surfaced roofings, except that a mineral-surface is used in place of the flood coat and job-applied gravel. Cap-sheet roofing consists of heavy roofing felts (75 to 105 pounds per square) of organic or glass fibers. Mineral-surfaced cap sheets are coated on both sides with asphalt and surfaced on the exposed side with mineral granules, mica, or similar materials. The cap sheets are applied with a 2-inch lap for single-ply construction or a 19-inch lap if two-ply construction is desired. The mineral surfacing is omitted on the portion that is lapped. The cap sheets are laid in hot asphalt along with the base sheet. Cap sheets are used on slopes between 1/2: 12 and 6:12 where weather is moderate.

COLD-PROCESS ROOFING.—Cold-applied emulsions, cutback asphalts, or patented products can be applied over the top ply of a hot-mopped roof or as an adhesive between plies. If emulsified asphalt is to be used as art adhesive between plies, special plies (such as glass fiber) must be used that are sufficiently porous to allow vapors to escape. Decorative and reflective coatings with asphalt-emulsion bases have been developed to protect and decorate roofing.

DRAINAGE.—When required, positive drainage should be established before the installation of built-up roofing. This can be achieved by the use of lightweight concrete or roofing insulation placed as specified with slopes toward roof drains, gutters, or scuppers.

APPLICATION PROCEDURES.—Built-up roofing consists of several layers of tar-rag-felt, asphalt-rag-felt, or asphalt-asbestos-felt set in a hot binder of melted pitch or asphalt.

Each layer of built-up roofing is called a ply. In a five-ply roof, the first two layers are laid without a binder; these are called the dry nailers. Before the nailers are nailed in place, a layer of building paper is tacked down to the roof sheating.

A built-up roof, like a shingled roof, is started at the eaves so the strips will overlap in the direction of the watershed. Figure 3-31 shows how 32-inch building paper is laid over a wood-sheathing roof to get five-ply coverage at all points in the roof. There are basically seven steps to the process.

1. Lay the building paper with a 2-inch overlap. Spot-nail it down just enough to keep it from blowing away.

2. Cut a 16-inch strip of saturated felt and lay it along the eaves. Nail it down with nails placed 1 inch from the back edge and spaced 12 inches OC.

3. Nail a full-width (32-inch) strip over the first strip, using the same nailing schedule.

4. Nail the next full-width strip with the outer edge 14 inches from the outer edges of the first two strips to obtain a 2-inch overlap over the edge of the first strip laid. Continue laying full-width strips with the same exposure (14 inches) until the opposite edge of the roof is reached. Finish off with a half-strip along this edge. This completes the two-ply dry nailer.

5. Start the three-ply hot with one-third of a strip, covered by two-thirds of a strip, and then by a full strip, as shown. To obtain a 2-inch overlap of the outer edge of the second full strip over the inner edge of the first strip laid, you must position the outer edge of the second full strip 8 2/3 inches from the outer edges of the first three strips. To maintain the same overlap, lay the outer edge of the third full strip 10 1/3 inches from the outer edge of the second full strip. Subsequent strips can be laid with an exposure of 10 inches. Finish off at the opposite edge of the roof with a full strip, two-thirds of a strip, and one-third of a strip to maintain three plies throughout.

6. Spread a layer of hot asphalt (the flood coat) over the entire roof.

7. Sprinkle a layer of gravel, crushed stone, or slag over the entire roof.

Melt the binder and maintain it at the proper temperature in a pressure fuel kettle. Make sure the kettle is suitably located. Position it broadside to the wind, if possible. The kettle must be set up and kept level. If it is not level, it will heat unevenly, creating a hazard. The first duty of the kettle operator is to inspect the kettle, especially to ensure that it is perfectly dry. Any accumulation of water inside will turn to steam when the kettle gets hot. This can cause the hot binder to bubble over, which creates a serious fire hazard. Detailed procedure for lighting off, operating, servicing, and maintaining the kettle is given in the manufacturer's manual. Never operate the kettle unattended, while the trailer is in transit, or in a confined area.

The kettle operator must maintain the binder at a steady temperature, as indicated by the temperature gauge on the kettle. Correct temperature is designated in binder manufacturer's specifications. For asphalt, it is about 400°F. The best way to keep an even temperature is to add material at the same rate as melted material is tapped off. Pieces must not be thrown into the melted mass, but placedon the surface, pushed under slowly, and then released. If the material is not being steadily tapped off, it may eventually overheat, even with the burner flame at the lowest possible level. In that case, the burner should be withdrawn from the kettle and placed on the ground to be reinserted when the temperature falls. Prolonged overheating causes flashing and impairs the quality of the binder.

Asphalt or pitch must not be allowed to accumulate on the exterior of the kettle because it creates a fire hazard. If the kettle catches fire, close the lid immediately, shut off the pressure and burner valves, and, if possible, remove the burner from the kettle. Never attempt to extinguish a kettle fire with water. Use sand, dirt, or a chemical fire extinguisher.

A hot rooting crew consists of a mopper and as many felt layers, broomers, nailers, and carriers as the size of the roof requires. The mopper is in charge of the roofing crew. It is the mopper's personal responsibility to mop on only binder that is at the proper temperature. Binder that is too hot will burn the felt, and the layer it makes will be too thin. A layer that is too thin will eventually crack and the felt may separate from the binder. Binder that is too cold goes on too thick so more material is used than is required.

The felt layer must get the felt down as soon as possible after the binder has been placed. If the interval between mopping and felt laying is too long, the binder will cool to the point where it will not bond well with the felt. The felt layer should follow the mopper at an interval of not more than 3 feet. The broomer should follow immediately behind the felt layer, brooming out all air bubbles and embedding the felt solidly in the binder.

Buckets of hot binder should never be filled more than three-fourths full, and they should never be carried any faster than a walk. Whenever possible, the mopper should work downwind from the felt layer and broomer to reduce the danger of spattering. The mopper must take every precaution against spattering at all times. The mopper should lift the mop out of the bucket, not drag it across the rim. Dragging the mop over the rim may upset the bucket, and the hot binder may quickly spread to the feet, or worse still to the knees, of nearby members of the roofing crew.

RECOMMENDED READING LIST

NOTE

Although the following references were current when this TRAMAN was published, their continued currency cannot be assured You therefore need to ensure that you are studying the latest revisions.

Basic Roof Framing, Benjamin Barnow, Tab Books, Inc., Blue Ridge Summit, Pa., 1986.

Design of Wood Frame Structures for Permanence, National Forest Products Association, Washington, D.C., 1988.

Exterior and Interior Trim, John E. Ball, Delmar Pub., Albany, N.Y., 1975.

Manual of Built-up Roof Systems, C. W. Griffin, McGraw-Hill Book Co., New York, 1982.

Modern Carpentry, Willis H. Wagner, Goodheart-Wilcox Co., South Holland, Ill., 1983.